SEW EURODRIVE

Industrial Gear Units

M1..N, X and MD series
Horizontal Helical and Bevel-Helical Gear Units

Versatile and powerful – Industrial gear units from SEW-EURODRIVE

Excellent performance needs a strong partner – SEW-EURODRIVE has been a supplier of drive technology for many decades, and now is among the leading companies for drive technology worldwide.

All services made by SEW-EURODRIVE

SEW-EURODRIVE offers the suitable industrial gear unit where extremely large torque ratings are required to carry out extremely large movements. The modular concept will once again provide optimum adaptation of industrial gear units to meet a wide range of different applications.

SEW-EURODRIVE is your competent partner for all areas, from process planning, through project planning all the way to startup. These services are supported by our renowned, worldwide service network in order to guarantee the reliable completion of all process stages.

This brochure describes gear units for horizontal applications. For information and dimension sheets for vertical gear units (mounting position M5) and upright gear units with input and output shaft arranged on top of one another (mounting position M4), refer to the product catalog of the X series of industrial gear units.

Overview of product range

Helical gear units

Stages		1	2	3	4
Nominal gear ratio I_N		**1 – 7.1**	**5.6 – 22.4**	**20 – 112**	**90 – 450**
Series	**Nominal torque M_{N2}**				
M1..N	0.5 kNm – 248 kNm	M1.. 10N – 120N **Page 8**			
X.F..	6.8 kNm – 475 kNm		X2F.. 100 – 320 **Page 22**	X3F.. 100 – 320 **Page 26**	X4F.. 120 – 320 **Page 30**
MD.F..	528 kNm – 2 548 kNm		MD2F.. 360 – 470 **Page 56**	MD3F.. 360 – 520 **Page 58**	MD4F.. 360 – 520 **Page 60**

Bevel-helical gear units

Stages		2	3	4	5
Nominal gear ratio I_N		**6.3 – 14**	**12.5 – 90**	**80 – 450**	**315 – 1 600**
Series	**Nominal torque M_{N2}**				
X.K..	6.8 kNm – 475 kNm	X2K.. 100 – 250 **Page 38**	X3K.. 100 – 320 **Page 42**	X4K.. 120 – 320 **Page 46**	
MD.K..	561 kNm – 2 548 kNm		MD3K.. 360 – 420 **Page 64**	MD4K.. 360 – 520 **Page 66**	MD5K.. 360 – 520 **Page 68**

M1..N series

This series covers purely single-stage helical gear units with parallel input and output shaft in horizontal mounting position. Its impressive features include a maintenance-free non-contact seal (from size 30) and other innovative solutions that transfer the high drive power at low gear ratios with minimal warming of the gear unit oil. The horizontally split gear unit housing adds to the maintainability of this series.

Central oil lubrication, which is used in the paper industry among others, is one of the standard options in this series.
The single-stage gear units of the M1..N series are available for the torque range between 0.5 and 248 kNm.

Typical applications include drives for pumps, crushers, paper machines and horizontal pulpers.
In the energy generation sector, they act as reducers between water turbines and generators.

Type designation M1..N series

M 1 P S F 50 N *I..*

Other design designation

New series

Gear unit size
10 – 120

Gear unit mounting
F = Foot

Type of output shaft
S = Solid shaft with key

Gear unit design
P = Helical gear unit

Number of gear unit stages
1 = 1-stage

Industrial gear unit series

M1..N series –
Equipment variants and design features

Solid shaft with key

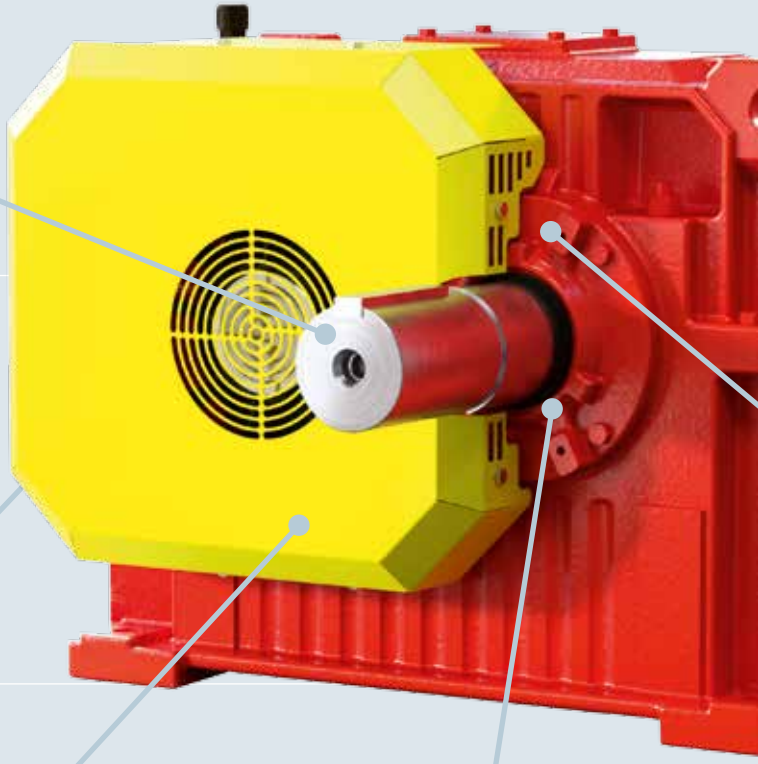

Oil sight glass or oil dipstick

– Effective cooling systems: fan, cooling coil or circulation cooling
– Oil heater

Various sealing systems such as radial labyrinth seal (contactless)

Cast iron housing (EN-GJL-250) up to size 100 (optional nodular cast iron possible), housing in welded steel from size 110.

Sensors: PT100 temperature sensor, vibration sensor

Splash lubrication (lowered oil level) and pressure lubrication; connection to central lubrication possible

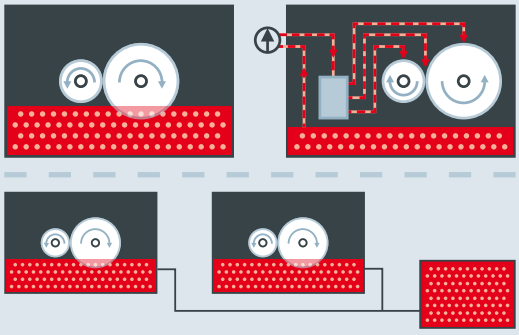

Other additional features and complete drive packages available

More information about the equipment variants and design features of the M1..N series can be found in the “M1..N Series Single-Stage Helical Gear Unit” catalog.

Selection table

The selection table shows the nominal gear unit torque M_{N2} in kNm as a function of the size and the nominal gear ratio i_N.

Nominal gear unit torque M_{N2} kNm

i_N	Size											
	10	**20**	**30**	**40**	**50**	**60**	**70**	**80**	**90**	**100**	**110**	**120**
1	1.3	5.5	10.8	15.4	20.4	29.3	40.2	51	67.4	89.7	122.6	–
1.12	1.4	5.8	11.4	16.3	22.3	31	43.5	56	71.8	95.5	130.5	–
1.25	1.5	6.1	12.5	17.4	24.3	33.2	46.1	59.5	75.7	100.7	137.7	–
1.4	1.6	6.4	13.1	18.4	25.7	35.1	48.6	62.9	80.1	106.6	145.7	188.1
1.6	1.6	6.3	13	18.6	25.5	35.3	48.4	65.5	83.5	111.1	151.9	199.3
1.8	1.7	6.5	14.1	20.1	27.6	36.7	52.4	69	87.5	116.3	159	210.6
2	1.7	7	13.9	19.8	27.2	39.6	54.3	71.2	90.9	121	165.4	218.1
2.25	1.5	6.9	14.6	21.1	29.2	38.8	53.2	74.7	94.8	126.1	172.4	225.7
2.5	1.5	7	12.7	19	27	39.5	56.8	77	98.4	130.9	178.9	233.2
2.8	1.6	6.7	13.3	19.1	26.4	38.2	55.4	79.4	101.4	134.8	184.4	240.8
3.15	1.5	6.4	12.9	18.3	25.5	36.2	51	75.2	104.4	138.8	189.8	248.4
3.55	1.3	5.9	11.7	17.1	23.9	33.7	47.5	70.2	99.6	143.1	195.4	233.8
4	1.2	5.5	10.7	15.7	21.5	31	43.9	64.3	91.7	134.6	197.1	239.6
4.5	1.1	5	10	14.3	19.5	27.7	39.5	62.4	88.5	130	180.6	245.5
5	0.9	4.4	8.4	12.7	17.2	27	38.2	57.6	80.3	120.3	158.6	221.3
5.6	0.7	3.7	7.7	12.1	17.3	22.1	35.6	51.6	73.3	107.8	145.4	216.5
6.3	0.7	3.1	7.2	11.1	15.3	21.6	31.8	46.1	65.4	93	132.4	–
7.1	0.5	2.5	6.6	9.7	13.2	18.9	27.3	38.9	–	–	–	–

Calculated using n1 = 1000 1/min

Exact gear unit ratio i_{ex}

The table shows the exact gear unit ratio i_{ex} as a function of the size and nominal gear ratio I_N.

Exact gear unit ratio i_{ex}

i_N	Size											
	10	**20**	**30**	**40**	**50**	**60**	**70**	**80**	**90**	**100**	**110**	**120**
1	1.000	1.000	1.000	1.000	1.000	1.000	1.000	1.000	1.000	1.000	1.000	–
1.12	1.133	1.122	1.133	1.133	1.133	1.130	1.125	1.130	1.133	1.133	1.133	–
1.25	1.256	1.261	1.256	1.256	1.256	1.250	1.267	1.250	1.256	1.256	1.256	–
1.4	1.425	1.419	1.425	1.425	1.425	1.415	1.429	1.415	1.425	1.425	1.425	1.368
1.6	1.595	1.575	1.595	1.595	1.595	1.579	1.590	1.579	1.595	1.595	1.595	1.571
1.8	1.771	1.784	1.771	1.771	1.771	1.800	1.757	1.800	1.771	1.771	1.771	1.813
2	2.000	1.971	2.000	2.000	2.000	2.000	2.000	1.970	2.000	2.000	2.000	2.000
2.25	2.265	2.219	2.233	2.233	2.233	2.267	2.258	2.267	2.233	2.233	2.233	2.214
2.5	2.548	2.552	2.548	2.516	2.484	2.500	2.517	2.500	2.556	2.556	2.556	2.462
2.8	2.828	2.815	2.840	2.840	2.840	2.808	2.778	2.808	2.840	2.840	2.840	2.750
3.15	3.111	3.120	3.111	3.192	3.154	3.125	3.208	3.125	3.174	3.174	3.174	3.091
3.55	3.607	3.522	3.583	3.542	3.500	3.542	3.591	3.500	3.583	3.542	3.500	3.500
4	3.962	3.960	4.000	3.955	4.042	3.955	4.046	4.000	4.000	3.955	3.909	3.909
4.5	4.417	4.391	4.417	4.435	4.500	4.500	4.500	4.476	4.500	4.450	4.400	4.400
5	5.095	4.952	5.095	4.952	5.050	5.000	5.080	4.952	5.095	4.952	5.050	4.913
5.6	5.690	5.579	5.500	5.579	5.619	5.704	5.652	5.579	5.714	5.579	5.722	5.476
6.3	6.222	6.381	6.222	6.300	6.316	6.381	6.286	6.263	6.222	6.353	6.316	–
7.1	7.158	7.158	7.158	7.056	7.118	7.000	7.000	7.118	–	–	–	–

Shaft positions

The following shaft positions are possible for series M1..N:

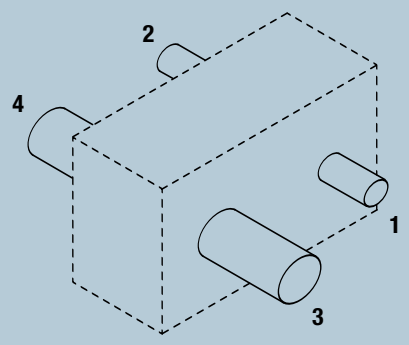

M1..N helical gear unit
M1PSF10 – 100N

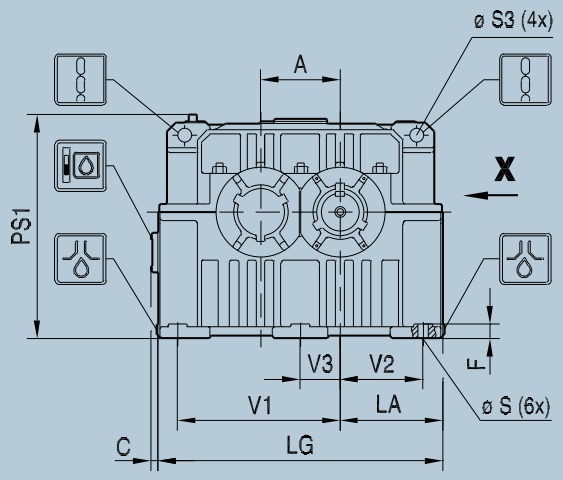

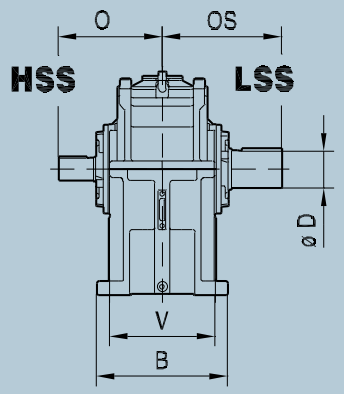

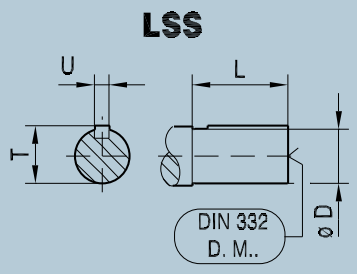

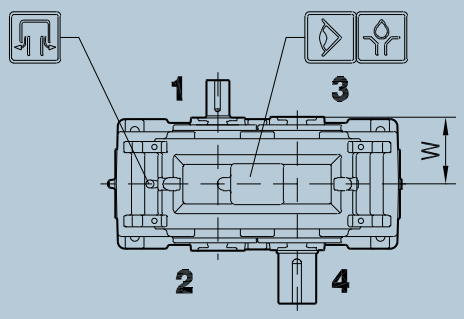

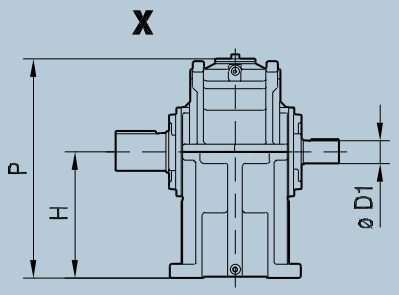

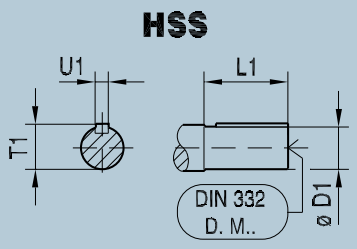

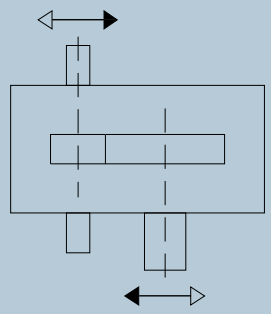

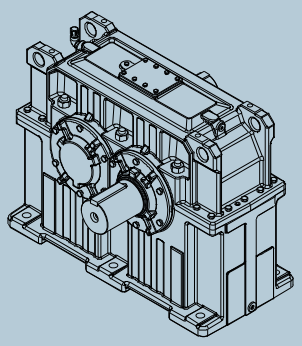

Size	A	B	C	F	H	LA	LG	P	PS1	Ø S	Ø S3	V	V1	V2	V3	W
10	100	170	17	22	160	128.5	357	275	379	14.5 (4x)	20	130	200	100	–	120
20	160	260	36	32	250	203	566	451	464	18.5 (4x)	30	200	325	165	–	155
30	200	340	36	40	315	258	716	561	577	24 (4x)	45	270	410	210	–	185
40	225	380	36	45	355	290	805	626	637	24 (4x)	45	310	460	230	–	205
50	250	420	34	50	400	330	910	701	712	28 (6x)	45	340	515	265	125	225
60	280	460	37	50	450	365	1010	786	793	28 (6x)	55	370	575	295	140	250
70	315	520	37	56	500	407.5	1130	876	882	35 (6x)	55	420	645	330	158	275
80	355	560	36	63	560	451.5	1258	981	992	35 (6x)	65	460	725	370	178	300
90	400	570	33	63	560	467.5	1335	991	1002	42 (6x)	65	470	810	410	200	330
100	450	590	29	60	630	545	1445	1106	1151	42 (6x)	65	480	720	365	225	365

HSS							
	i_N	Ø D1	L1	O	T1	U1	DIN 332 DR. M..
10	$1.0 \le i \le 3.3$	40_{k6}	82	202	43	12_{h9}	M16x36
	$3.3 < i \le 4.8$	30_{k6}	58	178	33	8_{h9}	M10x22
	$4.8 < i \le 7.1$	25_{k6}	42	162	28	8_{h9}	M10x22
20	$1.0 \le i \le 3.3$	65_{m6}	105	260	69	18_{h9}	M20x42
	$3.3 < i \le 4.8$	50_{k6}	82	237	53.5	14_{h9}	M16x36
	$4.8 < i \le 7.1$	40_{k6}	82	237	43	12_{h9}	M16x36
30	$1.0 \le i \le 3.3$	80_{m6}	130	315	85	22_{h9}	M20x42
	$3.3 < i \le 4.8$	65_{m6}	105	290	69	18_{h9}	M20x42
	$4.8 < i \le 7.1$	50_{k6}	82	267	53.5	14_{h9}	M16x36
40	$1.0 \le i \le 3.3$	90_{m6}	130	335	95	25_{h9}	M24×50
	$3.3 < i \le 4.8$	70_{m6}	105	310	74.5	20_{h9}	M20x42
	$4.8 < i \le 7.1$	55_{m6}	82	287	59	16_{h9}	M20x42
50	$1.0 \le i \le 3.3$	100_{m6}	165	390	106	28_{h9}	M24×50
	$3.3 < i \le 4.8$	80_{m6}	130	355	85	22_{h9}	M20x42
	$4.8 < i \le 7.1$	60_{m6}	105	330	64	18_{h9}	M20x42
60	$1.0 \le i \le 3.3$	110_{m6}	165	415	116	28_{h9}	M24×50
	$3.3 < i \le 4.8$	90_{m6}	130	380	95	25_{h9}	M24×50
	$4.8 < i \le 7.1$	65_{m6}	105	355	69	18_{h9}	M20x42
70	$1.0 \le i \le 3.3$	130_{m6}	200	475	137	32_{h9}	M24×50
	$3.3 < i \le 4.8$	100_{m6}	165	440	106	28_{h9}	M24×50
	$4.8 < i \le 7.1$	75_{m6}	105	380	79.5	20_{h9}	M20x42
80	$1.0 \le i \le 3.3$	140_{m6}	200	500	148	36_{h9}	M30x60
	$3.3 < i \le 4.8$	110_{m6}	165	465	116	28_{h9}	M24×50
	$4.8 < i \le 7.1$	85_{m6}	130	430	90	22_{h9}	M20x42
90	$1.0 \le i \le 3.3$	150_{m6}	200	530	158	36_{h9}	M30x60
	$3.3 < i \le 4.8$	120_{m6}	165	495	127	32_{h9}	M24x50
	$4.8 < i < 7.1$	100_{m6}	165	495	106	28_{h9}	M24×50
100	$1.0 \le i \le 3.3$	170_{m6}	240	605	179	40_{h9}	M30x60
	$3.3 < i \le 4.8$	140_{m6}	200	565	148	36_{h9}	M30x60
	$4.8 < i < 7.1$	110_{m6}	165	530	116	28_{h9}	M24x50

LSS						
Ø D	L	OS	T	U	DIN 332 DR. M..	kg
40_{k6}	82	202	43	12_{h9}	M16x36	55
65_{m6}	105	260	69	18_{h9}	M20x42	175
100_{m6}	165	350	106	28_{h9}	M24×50	335
110_{m6}	165	370	116	28_{h9}	M24×50	470
120_{m6}	165	390	127	32_{h9}	M24×50	635
140_{m6}	200	450	148	36_{h9}	M30x60	870
150_{m6}	200	475	158	36_{h9}	M30x60	1195
160_{m6}	240	540	169	40_{h9}	M30x60	1600
180_{m6}	240	570	190	45_{h9}	M30x60	2090
200_{m6}	280	645	210	45_{h9}	2-M20x36 +)	2925

The weights listed above do not include the lubricant. +) Please contact SEW-EURODRIVE.

M1..N helical gear unit
M1PSF110 - 120N

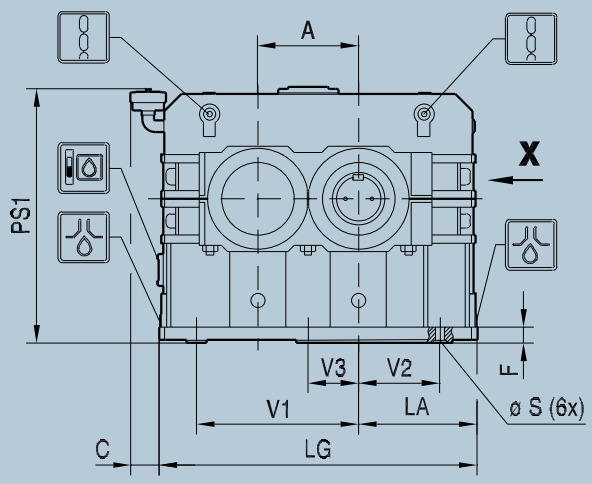

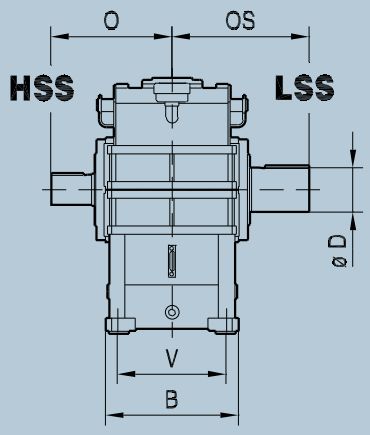

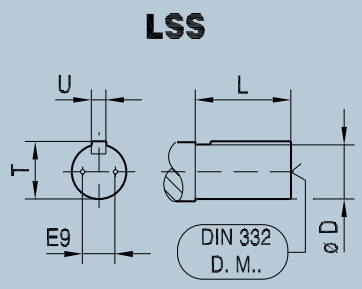

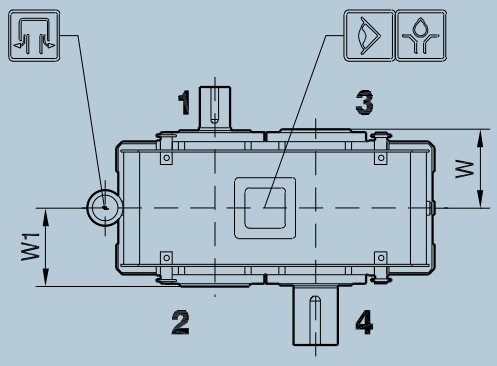

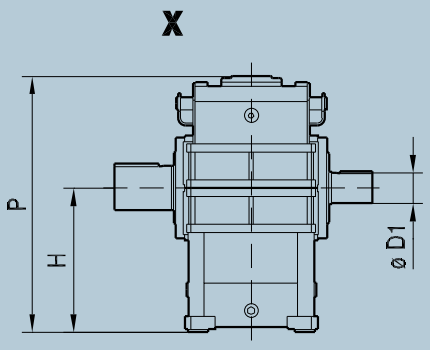

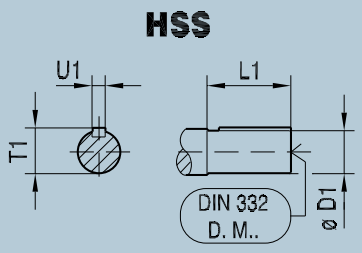

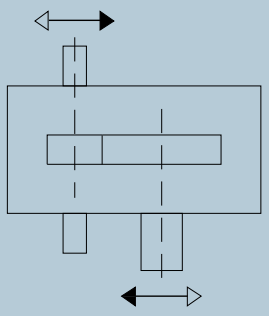

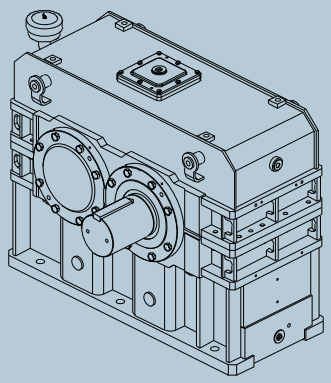

	M1PSF110 – 120															
	A	**B**	**C**	**F**	**H**	**LA**	**LG**	**P**	**PS1**	**Ø S**	**V**	**V1**	**V2**	**V3**	**W1**	**W2**
110	500	660	144	70	710	590	1580	1270	1288	42 (6x)	540	805	405	250	400	400
120	560	768	144	80	760	650	1760	1370	1388	42 (6x)	600	890	450	280	463	468

HSS								LSS							
Size	**i_N**	**Ø D1**	**L1**	**O**	**T1**	**U1**	**DIN 332 DR. M..**	**Ø D**	**L**	**OS**	**T**	**U**	**DIN 332 DR. M..**	**E9**	**kg**
110	$1.0 \leq i \leq 3.3$	180_{m6}	240	640	190	45_{h9}	M30x60	220_{m6}	280	680	231	50_{h9}	2-M20x36	132	3760
	$3.3 < i \leq 4.8$	150_{m6}	200	600	158	36_{h9}	M30x60								
	$4.8 < i < 7.1$	120_{m6}	165	565	127	32_{h9}	M24×50								
120	$1.0 \leq i \leq 3.3$	200_{m6}	280	743	210	45_{h9}	+)	260_{m6}	330	798	272	56_{h9}	2-M24x45	156	5630
	$3.3 < i \leq 4.5$	180_{m6}	240	703	190	45_{h9}	M30x60								
	$4.5 < I < 7.1$	150_{m6}	200	663	158	36_{h9}	M30x60								

The weights listed above do not include the lubricant.

+) Please contact SEW-EURODRIVE.

X series

With finely graduated sizes, the X series from SEW-EURODRIVE covers torques ranging from 6.8 to 475 kNm. The large number of predefined accessories offers a high degree of flexibility for adapting to a broad range of application situations – with a minimum of components at maximum availability.

X series – The industrial gear unit platform with finely graduated sizes

The intelligent, comprehensive gear unit concept impresses with its finely stepped sizes, variable installation and large number of modular options, such as motor adapters, backstops, sealing systems, shaft end pumps, mounting flanges, etc.

The wide range of gear ratios for helical and bevel-helical gear units from 6.3 - 450 demonstrates that the X series meets the requirements for a complete and comprehensive gear unit series.
Nearly any mounting position or shaft arrangement can be implemented on the driven machine. The reversible gear unit housing allows for variable installation since CCW and CW design is implemented in a single version, which means a reduced number of variants for operators and original equipment manufacturers.
Influencing factors, such as operational safety and ease of maintenance were particularly important for the design of the robust housing, low-noise gearing and cooling systems.

Efficient project planning tools – including generation of 2D and 3D dimension drawing – and predefined application extensions for conveyor belts, bucket elevators, hoists and agitators complete the product program. And if a specific customer solution should still be missing from our large number of predefined designs, we will of course add this to our range.

Type designation X series

X 3 K S B 260 /HH /B

Gear unit mounting
/B = Foot mounting
/T = Torque arm
/F = Flange

Housing design
HH = Horizontal housing
HU = Universal housing
HT = Thermal housing
HC = Hoist design
HA = Agitator design

Gear unit sizes
100 – 320

Application
B = Bucket elevator drive
C = Hoist design

Type of output shaft
S = Solid shaft with key
R = Smooth solid shaft
L = Splined solid shaft
C = Reinforced solid shaft with key (for hoists)
A = Hollow shaft with keyway
H = Hollow shaft with shrink disk
V = Splined hollow shaft

Gear unit designs
F = Helical gear unit
K = Bevel-helical gear unit
T = Bevel-helical gear unit

Number of gear unit stages
2 = 2-stage
3 = 3-stage
4 = 4-stage

Industrial gear unit series

X series –
Equipment variants and design features

Sensors: PT100 temperature sensor, vibration sensor, etc.

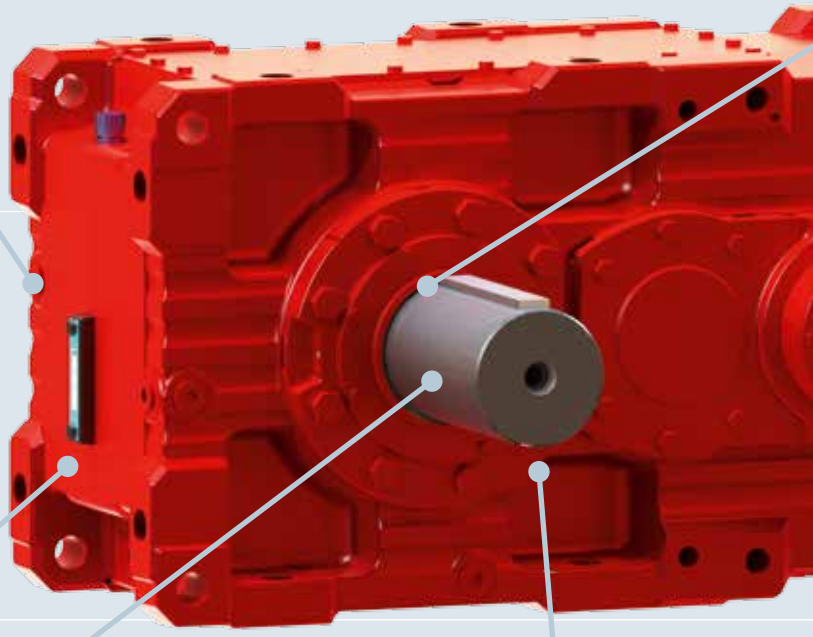

Oil sight glass or oil dipstick

Diverse shaft concepts

Solid shaft with key (or smooth)

Hollow shaft with keyway (or splined hollow shaft to DIN 5480)

Splined solid shaft to DIN 5480

Hollow shaft with shrink disk

Diverse range of coupling options

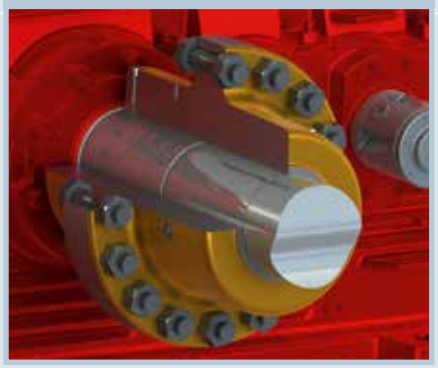

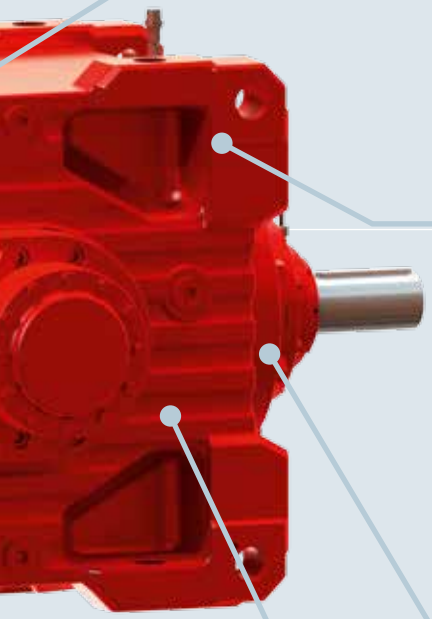

Various sealing systems such as radial labyrinth seal (Taconite)

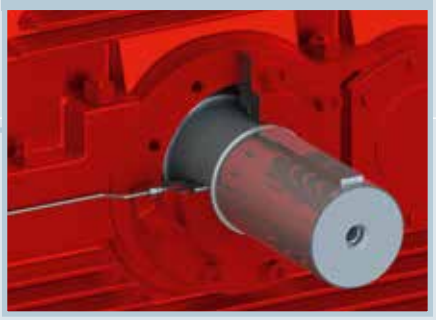

Cast iron housing EN-GJL-250 optional EN-GJS-400/500

- **Effective cooling systems: fan, cooling coil or circulation cooling**
- **Oil heater**

Splash, bath and pressure lubrication

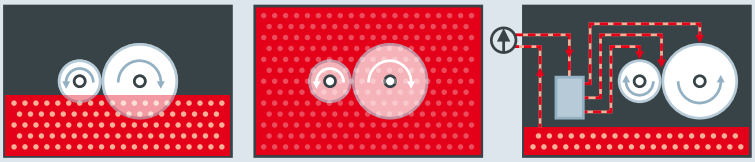

Other additional features and complete drive packages available

- Torque arm, mounting flange or foot mounting
- Motor adapter
- Swing base
- Base frame
- Motor scoop
- Motor bracket with V-belt drive
- Backstop
- Reinforced bearings
- Couplings
- …

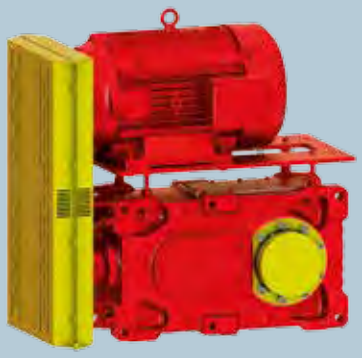

More information about the equipment variants and design features of the X series can be found in the X series industrial gear unit catalog.

X.F.. helical gear units: Nominal gear unit torque M_{N2} kNm

i_N	Size													
	100	**110**	**120**	**130**	**140**	**150**	**160**	**170**	**180**	**190**	**200**	**210**	**220**	**230**
6.3	–	–	11.3	–	20.3	–	31.6	–	53.8	–	66.9	–	87.7	–
7.1	5.6	–	11.4	–	20.9	–	32.5	–	54.6	59.6	70.1	75.5	90	99
8	5.75	8.1	11.5	14.3	21.7	25.4	33.6	39.4	55.5	60.6	71.9	79.3	93.2	101
9	5.9	8.25	11.6	14.4	22	25.9	35	40.5	56.8	61.5	75	81.1	95.4	105
10	6.1	8.4	11.7	14.5	22	27.2	35.6	41.8	58	63	76.8	84.2	99.5	107
11.2	6.4	8.5	11.8	14.6	22	27.5	36	43.7	58	65	79	86.8	102	112
12.5	6.6	8.5	11.9	14.7	22	27.5	36	44.3	58	65	79	90	106	114
14	6.8	8.5	12.2	14.8	22	27.5	36	45	58	65	79	90	109	119
16	6.8	8.5	12.4	14.9	22	27.5	36	45	58	65	79	90	112	122
18	6.8	8.5	12.8	15.2	22	27.5	36	45	58	65	79	90	112	127
20	6.8	8.5	10.9	15.6	21.8	27.5	35.7	45	58	65	77.6	90	99.2	130
22.4	6.5	8.5	12	16	22	27.5	36	45	58	63.6	79	88	107	112
25	6.8	7.5	12.8	13.6	22	26	36	44.6	58	65	79	90	112	123
28	6.8	7.8	12.8	15.5	22	27.5	36	45	58	65	79	90	112	131
31.5	6.8	8.2	12.8	16	22	27.5	36	45	58	65	79	90	112	131
35.5	6.8	8.5	12.8	16	22	27.5	36	45	58	65	79	90	112	131
40	6.8	8.5	12.8	16	22	27.5	36	45	58	65	79	90	112	131
45	6.8	8.5	12.8	16	22	27.5	36	45	58	65	79	90	112	131
50	6.8	8.5	12.8	16	22	27.5	36	45	58	65	79	90	112	131
56	6.8	8.5	12.8	16	22	27.5	36	45	58	65	79	90	112	131
63	6.8	8.5	12.8	16	22	27.5	36	45	58	65	79	90	112	131
71	6.8	8.5	12.8	16	22	27.5	36	45	58	65	79	90	112	131
80	6.8	8.5	12.8	16	22	27.5	36	45	58	65	79	90	112	131
90	6.8	8.5	12.8	16	22	27.5	36	45	58	65	79	90	112	131
100	6.8	8.5	12.8	16	22	27.5	36	45	58	65	79	90	112	131
112	–	8.5	12.8	16	22	27.5	36	45	58	65	79	90	112	131
125	–	–	12.8	16	22	27.5	36	45	58	65	79	90	112	131
140	–	–	12.8	16	22	27.5	36	45	58	65	79	90	112	131
160	–	–	12.8	16	22	27.5	36	45	58	65	79	90	112	131
180	–	–	12.8	16	22	27.5	36	45	58	65	79	90	112	131
200	–	–	12.8	16	22	27.5	36	45	58	65	79	90	112	131
224	–	–	12.8	16	22	27.5	36	45	58	65	79	90	112	131
250	–	–	12.8	16	22	27.5	36	45	58	65	79	90	112	131
280	–	–	12.8	16	22	27.5	36	45	58	65	79	90	112	131
315	–	–	12.8	16	22	27.5	36	45	58	65	79	90	112	131
355	–	–	12.8	16	22	27.5	36	45	58	65	79	90	112	131
400	–	–	–	16	–	27.5	–	45	–	65	–	90	–	131
450	–	–	–	16	–	27.5	–	45	–	–	–	–	–	–

240	250	260	270	280	290	300	310	320	X2F..
124	–	178	–	–	238	–	310	–	
133	134	185	195	–	246	254	318	332	
138	145	192	200	220	255	260	327	337	
144	149	198	208	226	262	272	335	350	
147	155	204	213	235	272	278	347	356	
152	159	205	220	241	278	289	355	370	
154	164	205	227	249	286	294	368	381	
156	166	205	236	256	298	305	380	393	
156	174	205	240	265	307	316	392	407	
156	175	205	240	270	308	328	400	415	
155	175	198	240	270	284	338	420	424	
156	166	205	215	270	308	303	425	447	X3F..
156	170	205	235	243	308	330	425	455	
156	172	205	240	270	308	337	425	475	
156	175	205	240	270	308	350	425	475	
156	175	205	240	270	308	350	425	475	
156	175	205	240	270	308	350	425	475	
156	175	205	240	270	308	350	425	475	
156	175	205	240	270	308	350	425	475	
156	175	205	240	270	308	350	425	475	
156	175	205	240	270	308	350	425	475	
156	175	205	240	270	308	350	425	475	
156	175	205	240	270	308	350	425	475	
156	175	205	240	270	308	350	425	475	
153	175	205	240	270	308	350	425	475	
156	164	205	240	270	308	350	425	475	X4F..
156	175	205	240	270	308	350	425	475	
156	175	205	240	270	308	350	425	475	
156	175	205	240	270	308	350	425	475	
156	175	205	240	270	308	350	425	475	
156	175	205	240	270	308	350	425	475	
156	175	205	240	270	308	350	425	475	
156	175	205	240	270	308	350	425	475	
156	175	205	240	270	308	350	425	475	
156	175	205	240	270	308	350	425	475	
–	175	–	240	270	–	350	–	475	
–	–	–	–	270	–	–	–	–	

Selection table

The selection table shows the nominal gear unit torque M_{N2} in kNm as a function of the size and nominal gear ratio i_N.

Helical gear unit shaft positions

The following shaft positions are possible for series X.F..

Shaft position solid shaft

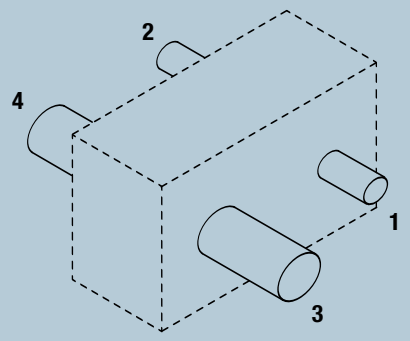

Shaft position hollow shaft

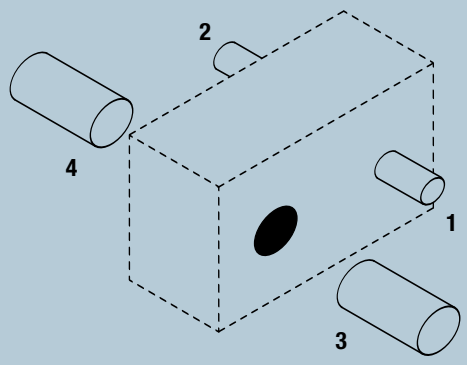

X.F.. helical gear units: Exact gear unit ratio i_{ex}

i_N	Size													
	100	110	120	130	140	150	160	170	180	190	200	210	220	230
6.3	–	–	6.44	–	6.61	–	6.21	–	6.49	–	6.44	–	6.42	–
7.1	7.09	–	7.34	–	7.07	–	7	–	7.27	7.25	7.31	7.29	7.08	7.27
8	7.94	8.16	8.04	8.06	8.21	8.21	7.73	7.72	8.1	8.14	7.98	8.26	7.97	7.98
9	8.52	9.14	9.15	9.15	8.78	8.79	8.71	8.67	9.08	9.05	9.05	9.04	8.8	9.03
10	9.53	9.8	10.2	10.05	10.18	10.19	10.02	9.61	9.97	10.17	10.09	10.24	10.06	9.91
11.2	11.03	10.98	11.61	11.41	10.89	10.91	11.3	10.8	11.17	11.14	11.44	11.42	11.1	11.39
12.5	12.34	12.69	12.83	12.75	12.95	12.64	12.34	12.46	12.19	12.52	12.69	12.93	12.61	12.5
14	13.93	14.2	14.61	14.48	13.85	13.54	13.91	14	13.65	13.61	14.39	14.37	13.92	14.28
16	15.59	16.03	16.28	16.04	16.49	16.08	15.93	15.34	16.06	15.3	16.28	16.27	16.21	15.68
18	17.21	17.94	18.53	18.22	17.63	17.22	17.95	17.24	17.98	17.93	18.47	18.44	17.89	18.36
20	19.26	19.8	20.26	20.35	21.8	20.48	20.5	19.79	19.99	20.15	20.73	20.88	20.46	20.16
22.4	22.6	22.17	23.06	23.11	23.31	21.93	23.1	22.24	22.39	22.32	23.51	23.47	22.58	23.17
25	25.29	26.01	25.7	25.32	27.25	27.08	25.09	25.47	25.88	25.08	25.94	26.57	25.06	25.44
28	27.94	29.12	29.26	28.76	29.14	28.99	28.27	28.63	28.98	28.9	29.41	29.37	27.66	28.38
31.5	31.27	32.15	30.9	32.12	33.22	33.85	31.72	31.18	31.13	32.47	32.13	33.25	30.96	31.17
35.5	34.95	36	35.18	36.48	35.52	36.24	35.75	35.04	34.86	34.76	36.44	36.38	34.16	35.05
40	39.11	40.21	41.45	38.62	42.36	41.25	39.72	39.42	39.86	39.06	39.25	41.19	40.46	38.49
45	42.31	45.02	47.18	43.87	45.3	44.17	44.76	44.31	44.64	44.51	44.51	44.44	44.65	45.81
50	47.35	48.68	49.83	51.81	51.63	52.61	50.22	49.36	47.95	50.01	48.62	50.32	49.96	50.3
56	52.91	54.51	56.73	58.84	55.21	56.33	56.59	55.48	53.7	53.55	55.14	55.06	55.14	56.58
63	59.22	60.89	65.48	62.29	66.11	64.12	63.38	62.41	64.56	60.17	64.48	62.33	64.28	62.12
71	68.53	68.17	74.54	70.75	70.69	68.66	71.42	70.14	72.3	72.09	73.13	73.02	70.94	72.79
80	76.69	78.85	78.73	81.85	80.57	82.1	80.13	78.77	77.67	81.01	79.88	82.67	79.39	79.92
90	85.71	88.29	89.63	92.96	86.16	87.91	90.31	88.53	86.98	86.73	90.59	90.45	87.62	89.89
100	95.92	98.62	107.48	98.41	107.36	100.07	100.04	99.59	106.69	97.45	99.49	102.41	101.26	98.71
112	–	110.42	122.36	111.77	114.8	107.15	112.74	111.93	119.48	119.14	112.83	112.66	111.76	114.66
125	–	–	129.23	134.35	130.85	133.33	126.49	124.34	128.35	133.87	123.25	127.55	125.06	125.9
140	–	–	147.12	152.59	139.92	142.77	142.55	139.74	143.73	143.33	139.78	139.56	138.02	141.61
160	–	–	154.68	161.54	163.65	162.51	152.08	157.21	158.55	161.05	152.34	158.01	158.12	155.49
180	–	–	176.09	183.47	175	174.01	171.4	176.68	177.55	177.05	172.77	172.51	174.51	179.04
200	–	–	205.3	193.35	210.13	203.25	202.75	189.02	209.5	198.95	199.92	195.31	201.61	196.6
224	–	–	233.72	219.59	224.7	217.63	228.49	212.43	234.6	233.94	226.73	226.38	222.51	228.29
250	–	–	246.85	256.63	256.11	260.96	256.35	251.99	252.02	262.87	247.66	256.3	248.99	250.68
280	–	–	281.01	291.46	273.87	279.43	288.9	283.2	282.23	281.43	280.87	280.44	274.8	281.94
315	–	–	295.46	308.56	320.31	318.07	308.22	318.61	311.32	316.23	306.12	317.51	314.81	309.59
355	–	–	336.35	350.43	342.53	340.58	347.36	358.08	348.63	347.64	347.17	346.64	347.45	356.48
400	–	–	–	369.32	–	397.81	–	383.08	–	390.64	–	392.45	–	391.43
450	–	–	–	419.44	–	425.96	–	430.53	–	–	–	–	–	–

240	250	260	270	280	290	300	310	320	X2F..
6.3	–	6.43	–	–	6.34	–	6.63	–	
7.26	6.78	7.28	7.07	–	7.16	6.75	7.51	7.17	
8.01	7.78	8.16	7.91	7.91	8.11	7.66	8.04	8.11	
9.22	8.61	9.22	8.96	8.86	9.17	8.64	9.1	8.7	
10.14	9.89	10.08	10.03	10.03	10.05	9.8	10.17	9.84	
11.67	10.89	11.4	11.07	11.23	11.36	10.71	11.52	11	
12.34	12.51	12.74	12.39	12.39	12.76	12.13	12.89	12.45	
14.21	13.26	14.41	13.99	13.88	14.42	13.59	14.59	13.94	
15.69	15.24	15.86	15.66	15.66	16.05	15.41	16.49	15.76	
18.06	16.86	17.94	17.42	17.54	18.14	17.11	18.16	17.6	
20.93	19.37	21.22	19.5	19.5	20.27	19.39	20.94	19.28	
24.09	22.49	24.01	23.31	21.85	22.91	21.6	23.07	22.36	X3F..
26.34	25.83	26.24	26.09	26.09	26.45	24.48	25.98	24.49	
30.32	28.31	29.75	28.82	29.22	28.45	28.19	29.33	27.74	
32.42	32.52	32.52	32.34	32.26	32.86	30.4	33.03	31.13	
37.31	34.84	36.78	35.72	36.22	37.13	35.01	36.39	35.27	
40.49	40.02	41.08	39.98	39.98	41.45	39.68	41.78	38.63	
46.6	43.51	46.47	45.12	44.78	46.84	44.16	46.03	44.62	
49.83	49.98	48.31	50.51	50.51	49.69	50.05	52.25	48.86	
57.35	53.55	60.68	53.07	56.57	57.86	52.94	57.42	55.79	
65.18	61.51	66.33	65.96	59.4	66.82	61.83	64.67	60.96	
75.02	70.05	75.02	72.85	73.87	75.52	71.2	71.25	69.06	
80.22	80.46	78	81.55	81.55	80.1	80.69	80.87	75.63	
92.34	86.21	88.23	85.68	91.33	90.53	85.35	89.1	86.36	
105.04	99.03	105.64	95.91	95.91	103.31	96.74	108.56	94.58	
120.9	112.88	119.49	116.03	107.42	116.77	110.09	119.6	115.92	X4F..
129.28	129.66	124.24	129.88	129.88	123.85	124.76	135.76	126.96	
148.8	138.93	140.53	136.46	145.47	139.98	131.98	149.56	144.96	
155.53	159.59	153.9	152.75	152.75	152.96	149.57	162.03	158.77	
179.01	167.13	174.09	169.04	171.08	172.88	162.99	178.5	173.01	
205.74	191.98	203.69	189.23	189.23	205.34	184.72	203.96	189.49	
236.8	221.09	230.4	223.73	211.93	232.08	218.8	224.7	217.79	
253.21	253.96	239.55	250.44	250.44	246.17	247.98	255.06	238.53	
291.45	272.11	270.97	263.12	280.49	278.23	262.31	281	272.35	
304.61	312.57	296.76	294.53	294.53	304.02	297.28	313.92	298.29	
350.61	327.35	335.68	325.95	329.88	343.61	323.95	345.84	335.2	
–	376.02	–	364.87	364.87	–	367.15	–	367.12	
–	–	–	–	408.66	–	–	–	–	

Exact gear unit ratio i_{ex}

The table shows the exact gear unit ratio i_{ex} in relation to the size and nominal gear ratio i_N.

SEW-EURODRIVE distinguishes between two housing designs that are used for X series horizontal gear units: Horizontal housing /HH and universal housing /HU.

The dimension sheets found in this booklet show housings in universal design that can be used in all mounting positions (M1 – M6). Dimension sheets for X gear units with horizontal housing can be found in the product catalog for X series industrial gear units.

X.F.. 2-stage helical gear unit
X2F100 – 210

X2FS../HU

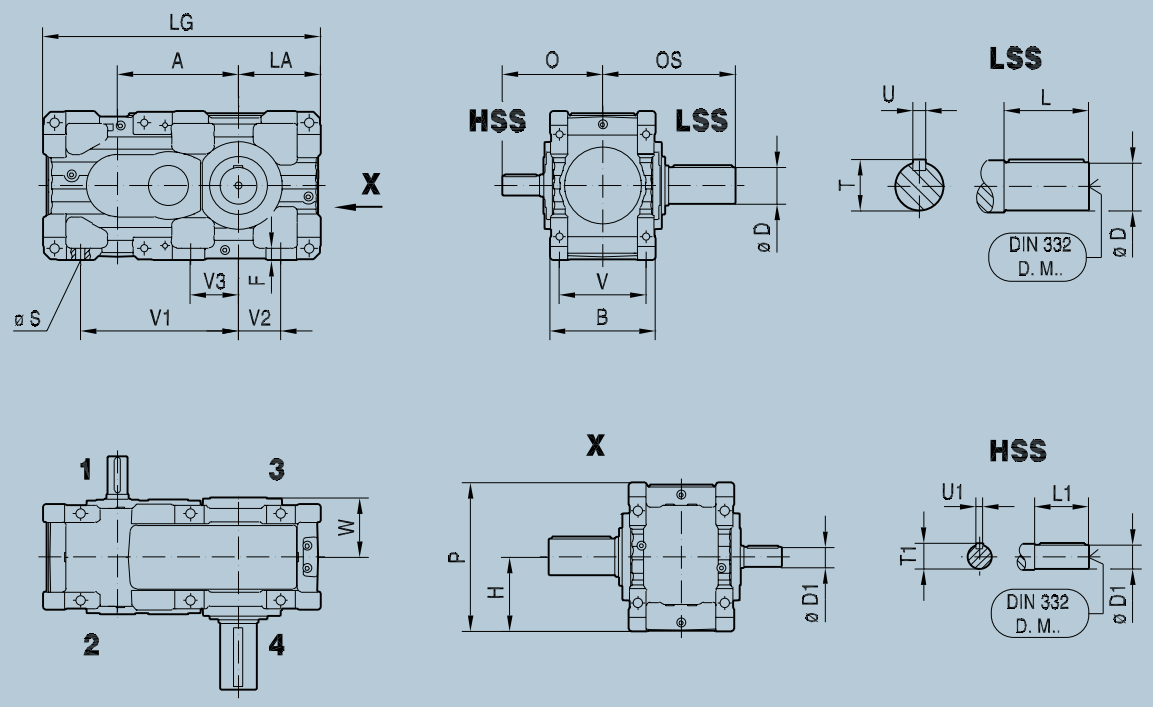

X2FA../HU

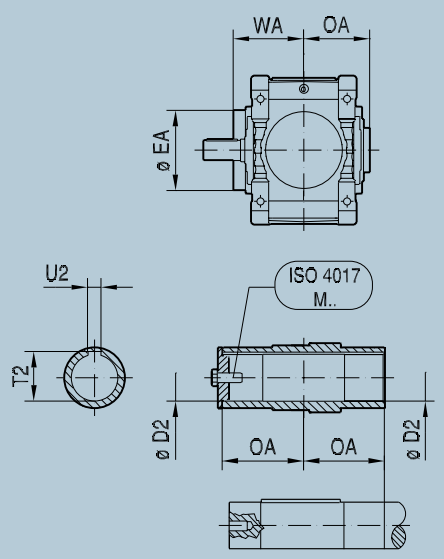

X2FH../HU

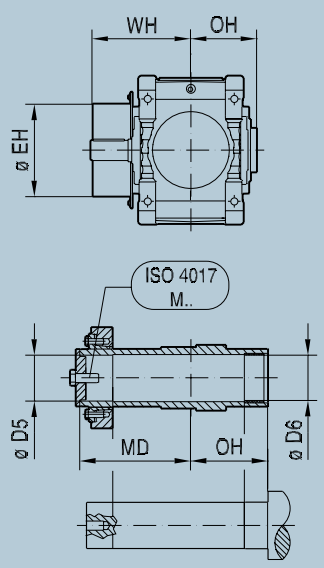

Size	A	B	F	H	LA	LG	P	Ø S	V	V1	V2	V3	W
X100	278	260	29	$190_{-0.5}$	$190_{-0.5}$	658	380	24 (4x)	210	370	90	–	153
X110	298	260	29	$190_{-0.5}$	$215_{-0.5}$	703	380	24 (4x)	210	390	115	–	153
X120	327	300	33	$225_{-0.5}$	$215_{-0.5}$	767	450	28 (4x)	245	440	105	–	174
X130	363	300	33	$225_{-0.5}$	$250_{-0.5}$	838	450	28 (4x)	245	475	140	–	174
X140	388	360	42	$265_{-0.5}$	$250_{-0.5}$	903	530	35 (4x)	290	510	110	–	202
X150	430	360	42	$265_{-0.5}$	$295_{-0.5}$	990	530	35 (4x)	290	555	155	–	202
X160	474	425	50	$315_{-0.5}$	$355_{-0.5}$	1144	630	42 (4x)	340	620	185	–	240
X170	525	425	50	$315_{-0.5}$	$355_{-0.5}$	1195	630	42 (4x)	340	670	185	–	240
X180	544	475	55	$335_{-0.5}$	$370_{-0.5}$	1249	670	42 (6x)	390	710	190	215	277
X190	576	475	55	$335_{-0.5}$	$370_{-0.5}$	1281	670	42 (6x)	390	740	190	215	277
X200	614	515	60	$375_{-0.5}$	$420_{-0.5}$	1409	750	48 (6x)	420	780	205	230	298
X210	650	515	60	$375_{-0.5}$	$420_{-0.5}$	1445	750	48 (6x)	420	815	205	230	298

HSS												
	i = 6.3 – 11.2*/i = 7.1 – 12.5/ i = 8 – 14*** **						**i = 12.5 – 18*/i = 14 – 20**/ i = 16 – 22.4*** **					
	Ø D1	**L1**	**O**	**T1**	**U1**	**DIN 332 DR. M..**	**Ø D1**	**L1**	**O**	**T1**	**U1**	**DIN 332 DR. M..**
X100**	42_{k6}	110	274	45	12_{h9}	M16	32_{k6}	80	244	35	10_{h9}	M12
X110***	42_{k6}	110	274	45	12_{h9}	M16	32_{k6}	80	244	35	10_{h9}	M12
X120*	55_{m6}	110	290	59	16_{h9}	M20	42_{k6}	110	290	45	12_{h9}	M16
X130***	55_{m6}	110	290	59	16_{h9}	M20	42_{k6}	110	290	45	12_{h9}	M16
X140*	70_{m6}	140	348	74.5	20_{h9}	M20	55_{m6}	110	318	59	16_{h9}	M20
X150***	70_{m6}	140	348	74.5	20_{h9}	M20	55_{m6}	110	318	59	16_{h9}	M20
X160*	80_{m6}	170	412	85	22_{h9}	M20	70_{m6}	140	382	74.5	20_{h9}	M20
X170***	80_{m6}	170	412	85	22_{h9}	M20	70_{m6}	140	382	74.5	20_{h9}	M20
X180*	90_{m6}	170	445	95	25_{h9}	M24	75_{m6}	140	415	79.5	20_{h9}	M20
X190**	90_{m6}	170	445	95	25_{h9}	M24	75_{m6}	140	415	79.5	20_{h9}	M20
X200*	100_{m6}	210	504	106	28_{h9}	M24	90_{m6}	170	464	95	25_{h9}	M24
X210**	100_{m6}	210	504	106	28_{h9}	M24	90_{m6}	170	464	95	25_{h9}	M24

LSS – X.FS.. (Solid shaft with key)						
Ø D	**L**	**OS**	**T**	**U**	**DIN 332 DR.M..**	**kg**
80_{m6}	170	343	85	22_{h9}	M20	210
90_{m6}	170	346	95	25_{h9}	M24	220
100_{m6}	210	401	106	28_{h9}	M24	320
110_{m6}	210	404	116	28_{h9}	M24	370
120_{m6}	210	432	127	32_{h9}	M24	520
130_{m6}	250	475	137	32_{h9}	M24	590
140_{m6}	250	506	148	36_{h9}	M30	890
160_{m6}	300	556	169	40_{h9}	M30	1040
170_{m6}	300	592	179	40_{h9}	M30	1350
170_{m6}	300	592	179	40_{h9}	M30	1410
180_{m6}	300	612	190	45_{h9}	M30	1890
190_{m6}	350	662	200	45_{h9}	M30	1920

LSS – X.FA.. (Hollow shaft with keyway)								
	Ø D2	**Ø EA**	**OA**	**T2**	**U2**	**WA**	**ISO 4017 M..**	**kg**
X100	75^{H8}	158	173	79.9	20^{JS9}	207	M20x60–8.8	200
X110	85^{H8}	170	176	90.4	22^{JS9}	209	M24x70–8.8	210
X120	95^{H8}	202	190.5	100.4	25^{JS9}	223	M24x70–8.8	300
X130	105^{H8}	222	194	111.4	28^{JS9}	225	M24x70–8.8	345
X140	115^{H8}	222	222	122.4	32^{JS9}	225	M24x70–8.8	485
X150	125^{H8}	250	224.5	132.4	32^{JS9}	255	M24x70–8.8	540
X160	135^{H8}	270	256	143.4	36^{JS9}	319	M30x90–8.8	820
X170	150^{H8}	270	256	158.4	36^{JS9}	319	M30x90–8.8	960
X180	165^{H8}	278	292	174.4	40^{JS9}	356	M30x90–8.8	1250
X190	165^{H8}	278	292	174.4	40^{JS9}	356	M30x90–8.8	1310
X200	180^{H8}	332	319.5	190.4	45^{JS9}	383	M30x90–8.8	1805
X210	190^{H8}	332	319.5	200.4	45^{JS9}	383	M30x90–8.8	1805

LSS – X.FH.. (Hollow shaft with shrink disk)								
	Ø D5	**Ø D6**	**Ø EH**	**MD**	**OH**	**WH**	**ISO 4017 M..**	**kg**
X100	80^{H7}	81^{H9}	220	261	173	294	M24x70–8.8	210
X110	90^{H7}	91^{H9}	225	265	176	298	M24x70–8.8	220
X120	100^{H7}	101^{H9}	272	286.5	190.5	319	M24x70–8.8	310
X130	110^{H7}	111^{H9}	292	297	194	328	M24x70–8.8	360
X140	120^{H7}	121^{H9}	304	329	222	356	M24x70–8.8	510
X150	130^{H7}	131^{H9}	322	337.5	224.5	368	M24x70–8.8	570
X160	140^{H7}	141^{H9}	368	375	256	427	M30x90–8.8	850
X170	150^{H7}	151^{H9}	368	364	256	427	M30x90–8.8	1015
X180	165^{H7}	166^{H9}	382	400	292	463	M30x90–8.8	1300
X190	165^{H7}	166^{H9}	382	400	292	463	M30x90–8.8	1360
X200	180^{H7}	181^{H9}	446	450.5	319.5	517	M30x90–8.8	1875
X210	190^{H7}	191^{H9}	446	453.5	319.5	517	M30x90–8.8	1890

X.F.. 2-stage helical gear unit
X2F220 – 320

X2FS../HU

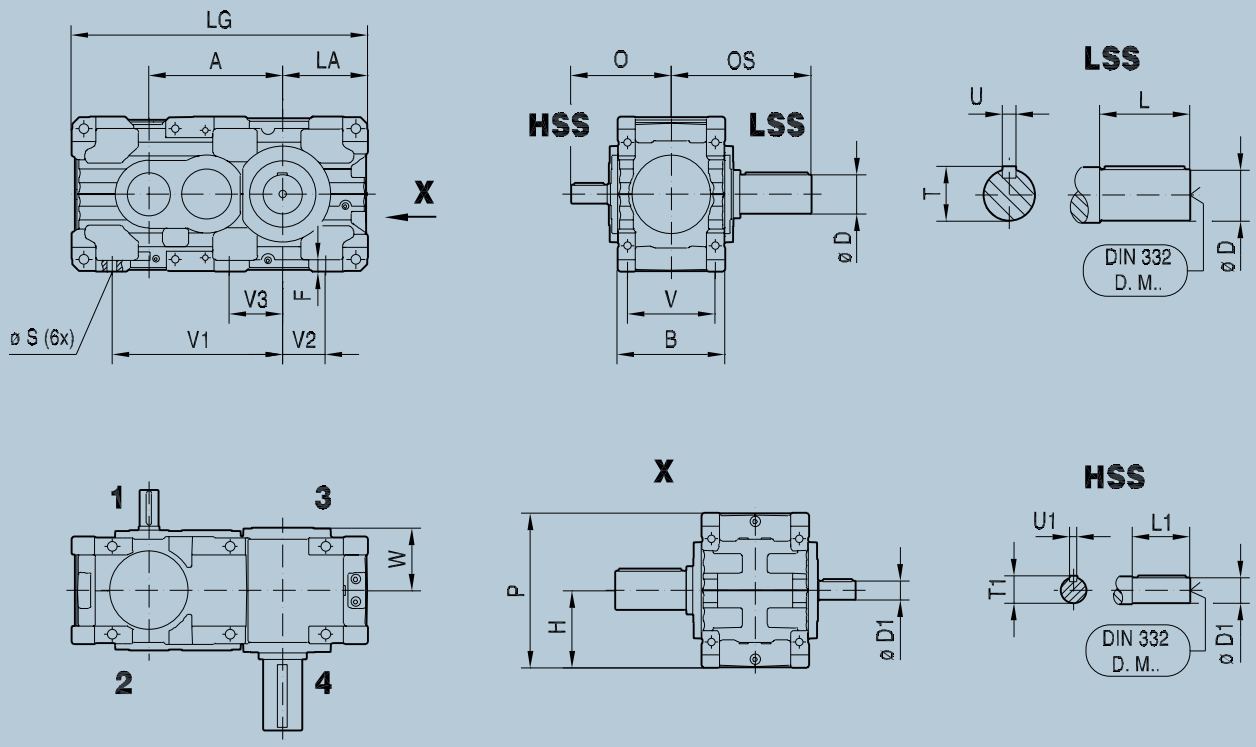

X2FA../HU

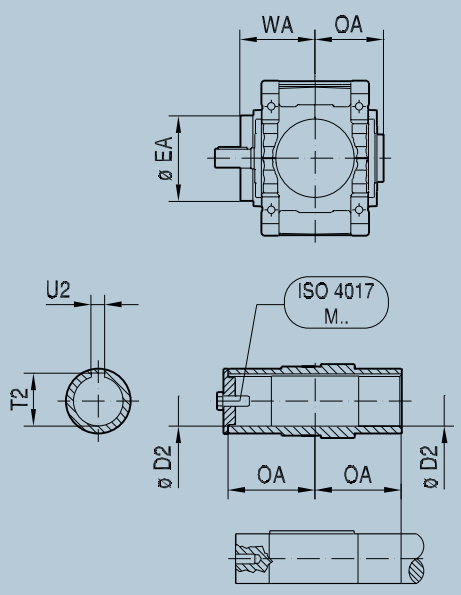

X2FH../HU

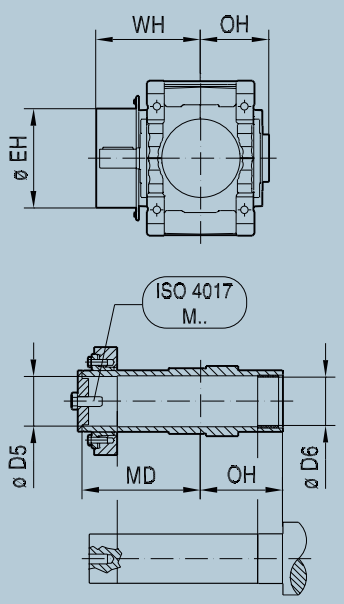

Size	A	W	F	H	LA	LG	P	Ø S	V	V1	V2	V3	W
X220	694	540	62	$425_{-0.5}$	$465_{-0.5}$	1584	850	48 (6x)	440	910	250	280	331
X230	734	540	62	$425_{-0.5}$	$465_{-0.5}$	1624	850	48 (6x)	440	950	250	280	331
X240	776	625	68	$450_{-0.5}$	$495_{-0.5}$	1721	900	56 (6x)	510	990	250	305	377
X250	799	625	68	$450_{-0.5}$	$495_{-0.5}$	1744	900	56 (6x)	510	1010	250	305	377
X260	855	705	73	$500_{-0.5}$	$545_{-0.5}$	1900	1017	56 (6x)	590	1110	300	350	417
X270	890	705	73	$500_{-0.5}$	$545_{-0.5}$	1935	1017	56 (6x)	590	1110	300	350	419
X280	942	705	73	$555_{-0.5}$	$610_{-0.5}$	2052	1127	56 (6x)	590	1190	360	380	419
X290	987	785	86	$580_{-0.5}$	$620_{-0.5}$	2187	1177	65 (6x)	655	1280	330	355	465
X300	1016	785	86	$580_{-0.5}$	$620_{-0.5}$	2216	1177	65 (6x)	655	1280	330	355	465
X310	1100	850	86	$630_{-0.5}$	$680_{-0.5}$	2410	1277	65 (6x)	720	1435	385	455	499
X320	1134	850	86	$630_{-0.5}$	$680_{-0.5}$	2444	1277	65 (6x)	720	1435	385	455	499

HSS												
	i = 6.3 – 11.2*/i = 7.1 – 12.5**						**i = 12.5 – 18*/i = 14 – 20****					
	Ø D1	**L1**	**O**	**T1**	**U1**	**DIN 332 DR. M..**	**Ø D1**	**L1**	**O**	**T1**	**U1**	**DIN 332 DR. M..**
X220*	110_{m6}	210	538	116	28_{h9}	M24	100_{m6}	210	538	106	28_{h9}	M24
X230**	110_{m6}	210	538	116	28_{h9}	M24	100_{m6}	210	538	106	28_{h9}	M24
X240*	120_{m6}	210	583	127	32_{h9}	M24	110_{m6}	210	583	116	28_{h9}	M24
X250**	120_{m6}	210	583	127	32_{h9}	M24	110_{m6}	210	583	116	28_{h9}	M24
	i = 6.3 – 11.2*/i = 7.1 – 12.5/ i = 8 – 14*****						**i = 12.5 – 18*/i = 14 – 20**/ i = 16 – 22.4*****					
X260*	130_{m6}	250	673	137	32_{h9}	M24	120_{m6}	210	633	127	32_{h9}	M24
X270**	130_{m6}	250	673	137	32_{h9}	M24	120_{m6}	210	633	127	32_{h9}	M24
X280***	130_{m6}	250	673	137	32_{h9}	M24	120_{m6}	210	633	127	32_{h9}	M24
X290*	150_{m6}	250	713	158	36_{h9}	M30	150_{m6}	250	713	158	36_{h9}	M30
X300**	150_{m6}	250	713	158	36_{h9}	M30	150_{m6}	250	713	158	36_{h9}	M30
X310*	170_{m6}	300	795	179	40_{h9}	M30	170_{m6}	300	795	179	40_{h9}	M30
X320**	170_{m6}	300	795	179	40_{h9}	M30	170_{m6}	300	795	179	40_{h9}	M30

LSS – X.FS.. (Solid shaft with key)						
Ø D	**L**	**OS**	**T**	**U**	**DIN 332 DR.M..**	**kg**
210_{m6}	350	703	221	50_{h9}	M30	2650
230_{m6}	410	763	241	50_{h9}	M36	2830
230_{m6}	410	811	241	50_{h9}	M36	3630
240_{m6}	410	811	252	56_{h9}	M36	3780
250_{m6}	410	847	262	56_{h9}	M36	4450
270_{m6}	470	920	282	63_{h9}	M36	4900
290_{m6}	470	920	302	63_{h9}	M36	5350
290_{m6}	470	962	302	63_{h9}	M36	6550
300_{m6}	470	962	314	70_{h9}	M36	7250
320_{m6}	470	999	334	70_{h9}	M42	7500
340_{m6}	550	1079	355	80_{h9}	M42	8300

LSS – X.FA.. (Hollow shaft with keyway)								
	Ø D2	**Ø EA**	**OA**	**T2**	**U2**	**WA**	**ISO 4017 M..**	**kg**
X220	210^{H8}	360	352.5	221.4	50^{JS9}	417	M30x90-8.8	2470
X230	210^{H8}	360	352.5	221.4	50^{JS9}	417	M30x90-8.8	2610
X240	230^{H8}	420	400.5	241.4	50^{JS9}	469	M36x110-8.8	3345
X250	240^{H8}	420	400.5	252.4	56^{JS9}	469	M36x110-8.8	3475
X260	240^{H8}	420	437	252.4	56^{JS9}	509	M36x110-8.8	4050
X270	275^{H8}	460	450	287.4	63^{JS9}	523	M36x110-8.8	4450
X280	275^{H8}	460	450	287.4	63^{JS9}	523	M36x110-8.8	4850
X290	290^{H8}	486	492	302.4	63^{JS9}	565	M36x110-8.8	5900
X300	290^{H8}	486	492	302.4	63^{JS9}	565	M36x110-8.8	6550
X310	320^{H8}	544	528.5	334.4	70^{JS9}	612	M42x130-8.8	6750
X320	320^{H8}	544	528.5	334.4	70^{JS9}	612	M42x130-8.8	7500

LSS – X.FH.. (Hollow shaft with shrink disk)								
	Ø D5	**Ø D6**	**Ø EH**	**MD**	**OH**	**WH**	**ISO 4017 M..**	**kg**
X220	210^{H7}	211^{H9}	484	497.5	352.5	562	M30x90-8.8	2575
X230	210^{H7}	211^{H9}	484	497.5	352.5	562	M30x90-8.8	2720
X240	230^{H7}	231^{H9}	558	571.5	400.5	654	M36x110-8.8	3510
X250	240^{H7}	241^{H9}	558	571.5	400.5	654	M36x110-8.8	3635
X260	250^{H7}	255^{H9}	558	608	437	694	M36x110-8.8	4200
X270	280^{H7}	285^{H9}	602	630	450	706	M36x110-8.8	4700
X280	280^{H7}	285^{H9}	602	630	450	706	M36x110-8.8	5100
X290	300^{H7}	305^{H9}	634	679	492	753	M36x110-8.8	6150
X300	300^{H7}	305^{H9}	634	679	492	753	M36x110-8.8	6800
X310	320^{H7}	325^{H9}	692	740.5	528.5	825	M42x130-8.8	7100
X320	320^{H7}	325^{H9}	692	740.5	528.5	825	M42x130-8.8	7850

X.F.. 3-stage helical gear unit
X3F100 – 210

X3FS../HU

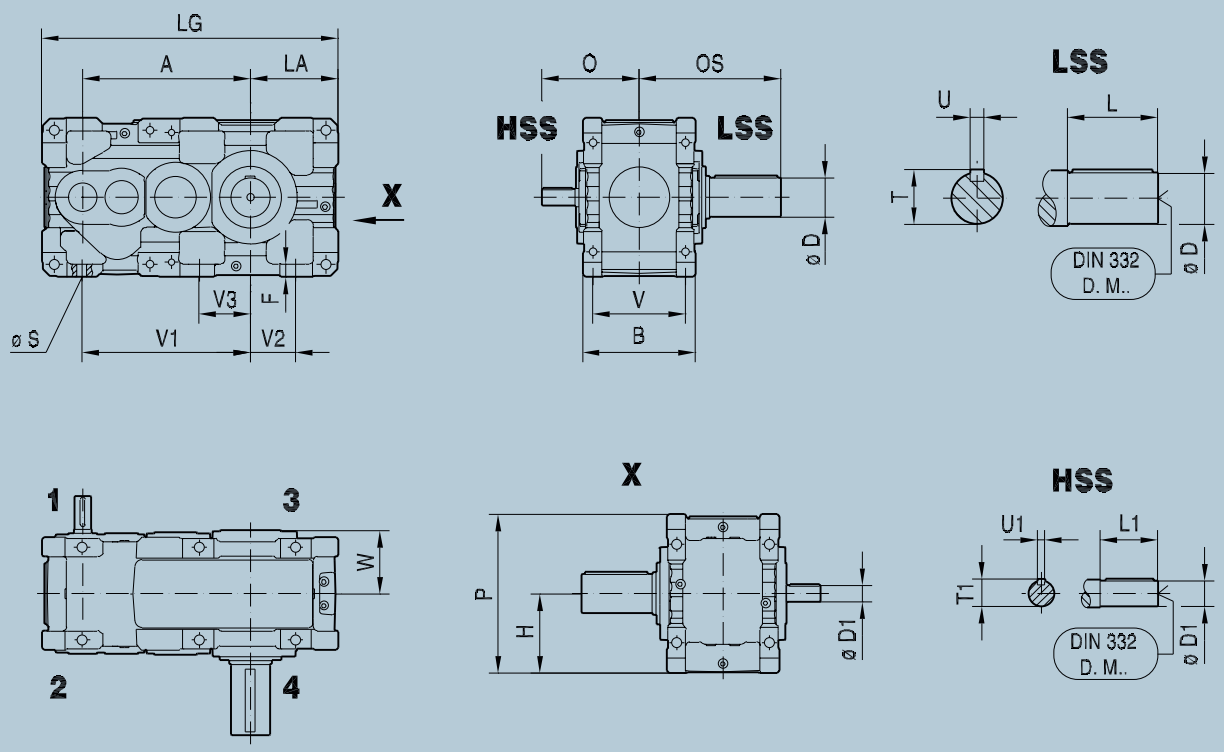

X3FA../HU

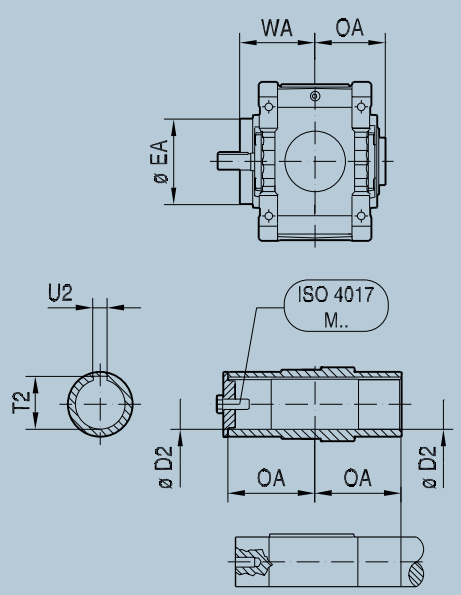

X3FH../HU

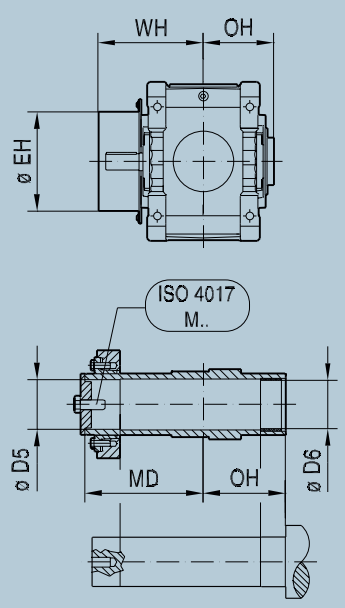

Size	A	W	F	H	LA	LG	P	Ø S	V	V1	V2	V3	W
X100	360	260	29	$190_{-0.5}$	$190_{-0.5}$	663	380	24 (4x)	210	370	90	–	153
X110	380	260	29	$190_{-0.5}$	$215_{-0.5}$	708	380	24 (4x)	210	390	115	–	153
X120	427	300	33	$225_{-0.5}$	$215_{-0.5}$	767	450	28 (4x)	245	440	105	–	174
X130	463	300	33	$225_{-0.5}$	$250_{-0.5}$	838	450	28 (4x)	245	475	140	–	174
X140	502	360	42	$265_{-0.5}$	$250_{-0.5}$	903	530	35 (4x)	290	510	110	–	202
X150	544	360	42	$265_{-0.5}$	$295_{-0.5}$	990	530	35 (4x)	290	555	155	–	202
X160	611	425	50	$315_{-0.5}$	$355_{-0.5}$	1144	630	42 (4x)	340	620	185	–	240
X170	662	425	50	$315_{-0.5}$	$355_{-0.5}$	1195	630	42 (4x)	340	670	185	–	240
X180	707	475	55	$335_{-0.5}$	$370_{-0.5}$	1249	670	42 (6x)	390	710	190	215	277
X190	739	475	55	$335_{-0.5}$	$370_{-0.5}$	1281	670	42 (6x)	390	740	190	215	277
X200	794	515	60	$375_{-0.5}$	$420_{-0.5}$	1409	750	48 (6x)	420	780	205	230	298
X210	830	515	60	$375_{-0.5}$	$420_{-0.5}$	1445	750	48 (6x)	420	815	205	230	298

HSS

	i = 20 – 56*/i = 22.4 – 63**/ i = 25 – 71***						i = 63 – 90*/i = 71 – 100**/ i = 80 – 112***					
	Ø D1	L1	O	T1	U1	DIN 332 DR. M..	Ø D1	L1	O	T1	U1	DIN 332 DR. M..
X100**	32_{k6}	80	244	35	10_{h9}	M12	32_{k6}	80	244	35	10_{h9}	M12
X110***	32_{k6}	80	244	35	10_{h9}	M12	32_{k6}	80	244	35	10_{h9}	M12
X120*	38_{k6}	80	258	41	10_{h9}	M12	38_{k6}	80	258	41	10_{h9}	M12
X130***	38_{k6}	80	258	41	10_{h9}	M12	38_{k6}	80	258	41	10_{h9}	M12
X140*	45_{k6}	110	318	48.5	14_{h9}	M16	45_{k6}	110	318	48.5	14_{h9}	M16
X150***	45_{k6}	110	318	48.5	14_{h9}	M16	45_{k6}	110	318	48.5	14_{h9}	M16
X160*	60_{m6}	140	381	64	18_{h9}	M20	50_{k6}	110	351	53.5	14_{h9}	M16
X170***	60_{m6}	140	381	64	18_{h9}	M20	50_{k6}	110	351	53.5	14_{h9}	M16
X180*	70_{m6}	140	411	74.5	20_{h9}	M20	55_{m6}	110	381	59	16_{h9}	M20
X190**	70_{m6}	140	411	74.5	20_{h9}	M20	55_{m6}	110	381	59	16_{h9}	M20
X200*	75_{m6}	140	430	79.5	20_{h9}	M20	60_{m6}	140	430	64	18_{h9}	M20
X210**	75_{m6}	140	430	79.5	20_{h9}	M20	60_{m6}	140	430	64	18_{h9}	M20

LSS – X.FS.. (Solid shaft with key)

Ø D	L	OS	T	U	DIN 332 DR.M..	kg
80_{m6}	170	343	85	22_{h9}	M20	220
90_{m6}	170	346	95	25_{h9}	M24	225
100_{m6}	210	401	106	28_{h9}	M24	340
110_{m6}	210	404	116	28_{h9}	M24	405
120_{m6}	210	432	127	32_{h9}	M24	570
130_{m6}	250	475	137	32_{h9}	M24	625
140_{m6}	250	506	148	36_{h9}	M30	970
160_{m6}	300	556	169	40_{h9}	M30	1125
170_{m6}	300	592	179	40_{h9}	M30	1450
170_{m6}	300	592	179	40_{h9}	M30	1515
180_{m6}	300	612	190	45_{h9}	M30	1850
190_{m6}	350	662	200	45_{h9}	M30	1930

LSS – X.FA.. (Hollow shaft with keyway)

	Ø D2	Ø EA	OA	T2	U2	WA	ISO 4017 M..	kg
X100	75^{H8}	158	173	79.9	20^{JS9}	207	M20x60–8.8	210
X110	85^{H8}	170	176	90.4	22^{JS9}	209	M24x70–8.8	215
X120	95^{H8}	202	190.5	100.4	25^{JS9}	223	M24x70–8.8	320
X130	105^{H8}	222	194	111.4	28^{JS9}	225	M24x70–8.8	380
X140	115^{H8}	222	222	122.4	32^{JS9}	225	M24x70–8.8	535
X150	125^{H8}	250	224.5	132.4	32^{JS9}	255	M24x70–8.8	575
X160	135^{H8}	270	256	143.4	36^{JS9}	319	M30x90–8.8	900
X170	150^{H8}	270	256	158.4	36^{JS9}	319	M30x90–8.8	1045
X180	165^{H8}	278	292	174.4	40^{JS9}	356	M30x90–8.8	1350
X190	165^{H8}	278	292	174.4	40^{JS9}	356	M30x90–8.8	1415
X200	180^{H8}	332	319.5	190.4	45^{JS9}	383	M30x90–8.8	1765
X210	190^{H8}	332	319.5	200.4	45^{JS9}	383	M30x90–8.8	1815

LSS – X.FH.. (Hollow shaft with shrink disk)

	Ø D5	Ø D6	Ø EH	MD	OH	WH	ISO 4017 M..	kg
X100	80^{H7}	81^{H9}	220	261	173	294	M24x70–8.8	220
X110	90^{H7}	91^{H9}	225	265	176	298	M24x70–8.8	225
X120	100^{H7}	101^{H9}	272	286.5	190.5	319	M24x70–8.8	330
X130	110^{H7}	111^{H9}	292	297	194	328	M24x70–8.8	395
X140	120^{H7}	121^{H9}	304	329	222	356	M24x70–8.8	560
X150	130^{H7}	131^{H9}	322	337.5	224.5	368	M24x70–8.8	575
X160	140^{H7}	141^{H9}	368	375	256	427	M30x90–8.8	930
X170	150^{H7}	151^{H9}	368	364	256	427	M30x90–8.8	1100
X180	165^{H7}	166^{H9}	382	400	292	463	M30x90–8.8	1400
X190	165^{H7}	166^{H9}	382	400	292	463	M30x90–8.8	1465
X200	180^{H7}	181^{H9}	446	450.5	319.5	517	M30x90–8.8	1835
X210	190^{H7}	191^{H9}	446	453.5	319.5	517	M30x90–8.8	1900

X.F.. 3-stage helical gear unit
X3F220 – 320

X3FS../HU

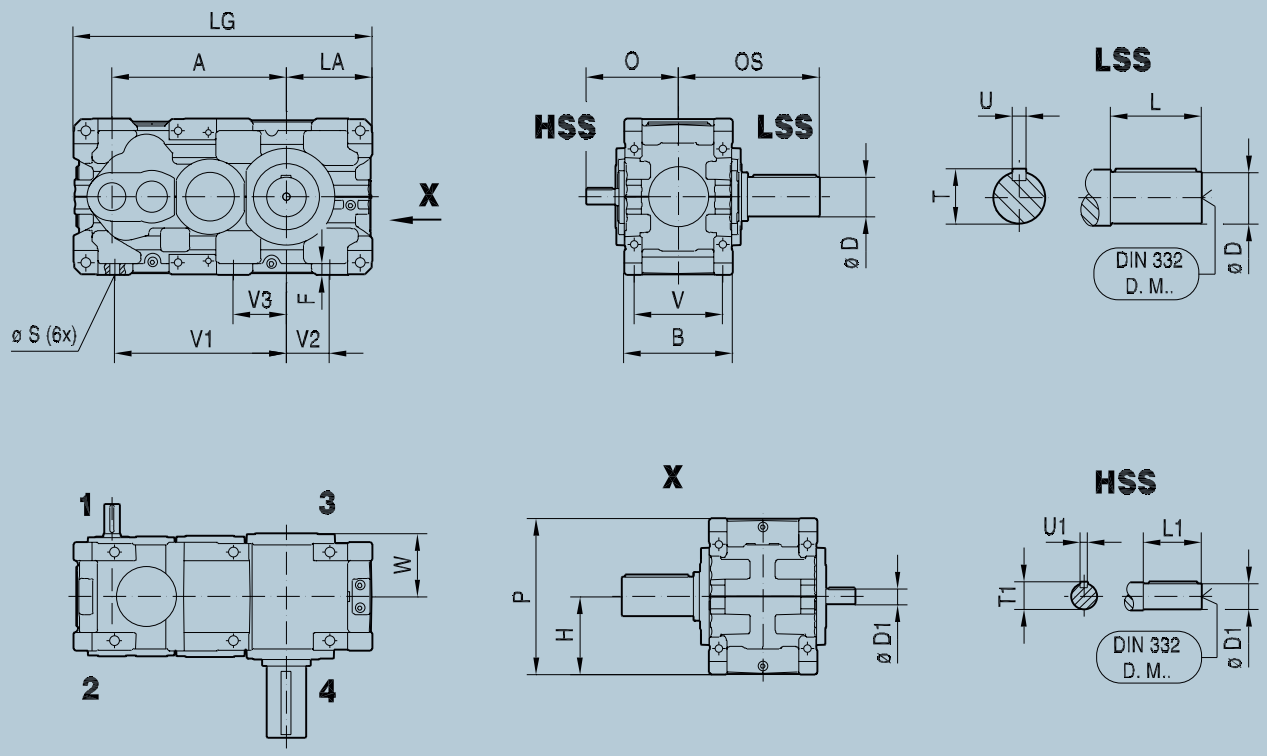

X3FA../HU

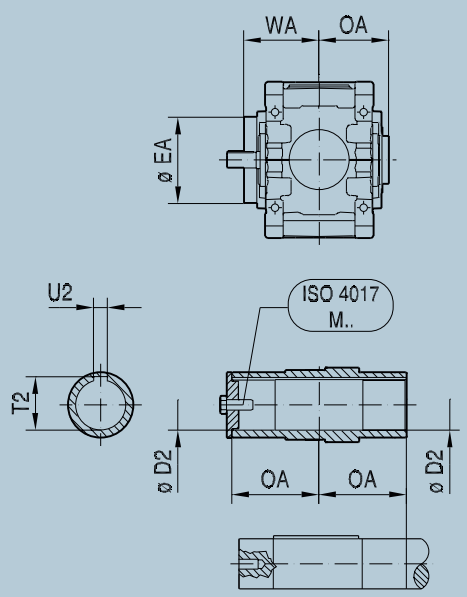

X3FH../HU

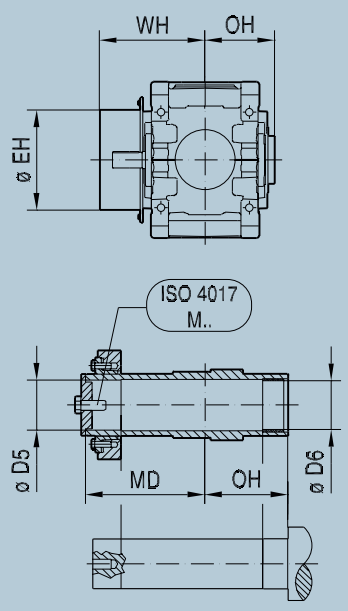

Size	A	B	F	H	LA	LG	P	Ø S	V	V1	V2	V3	W
X220	894	540	62	$425_{-0.5}$	$465_{-0.5}$	1584	850	48 (6x)	440	910	250	280	331
X230	934	540	62	$425_{-0.5}$	$465_{-0.5}$	1624	850	48 (6x)	440	950	250	280	331
X240	1004	625	68	$450_{-0.5}$	$495_{-0.5}$	1721	900	56 (6x)	510	990	250	305	377
X250	1027	625	68	$450_{-0.5}$	$495_{-0.5}$	1744	900	56 (6x)	510	1010	250	305	377
X260	1113	705	63	$500_{-0.5}$	$545_{-0.5}$	1900	1017	56 (6x)	590	1110	300	350	417
X270	1148	705	63	$500_{-0.5}$	$545_{-0.5}$	1935	1017	56 (6x)	590	1110	300	350	419
X280	1200	705	73	$555_{-0.5}$	$610_{-0.5}$	2052	1127	56 (6x)	590	1190	360	380	419
X290	1279	785	76	$580_{-0.5}$	$620_{-0.5}$	2187	1177	65 (6x)	655	1280	330	355	465
X300	1308	785	76	$580_{-0.5}$	$620_{-0.5}$	2216	1177	65 (6x)	655	1280	330	355	465
X310	1435	850	86	$630_{-0.5}$	$680_{-0.5}$	2410	1277	65 (6x)	720	1435	385	455	499
X320	1469	850	86	$630_{-0.5}$	$680_{-0.5}$	2444	1277	65 (6x)	720	1435	385	455	499

HSS												
	i = 6.3 – 11.2*/i = 7.1 – 12.5**						**i = 63 – 90* / i = 71 – 100****					
	Ø D1	**L1**	**O**	**T1**	**U1**	**DIN 332 DR. M..**	**Ø D1**	**L1**	**O**	**T1**	**U1**	**DIN 332 DR. M..**
X220*	80_{m6}	170	487	85	22_{h9}	M20	70_{m6}	140	457	74.5	20_{h9}	M20
X230**	80_{m6}	170	487	85	22_{h9}	M20	70_{m6}	140	457	74.5	20_{h9}	M20
X240*	90_{m6}	170	532	95	25_{h9}	M24	75_{m6}	140	502	79.5	20_{h9}	M20
X250**	90_{m6}	170	532	95	25_{h9}	M24	75_{m6}	140	502	79.5	20_{h9}	M20
	i = 20 – 50*/i = 22.4 – 56/ i = 25 – 63*** **						**i = 56 – 90*/i = 63 – 100**/ i = 71 – 112*** **					
X260*	100_{m6}	210	613	106	28_{h9}	M24	80_{m6}	170	573	85	22_{h9}	M20
X270**	100_{m6}	210	613	106	28_{h9}	M24	80_{m6}	170	573	85	22_{h9}	M20
X280***	100_{m6}	210	613	106	28_{h9}	M24	80_{m6}	170	573	85	22_{h9}	M20
X290*	100_{m6}	210	661	106	28_{h9}	M24	100_{m6}	210	661	106	28_{h9}	M24
X300**	100_{m6}	210	661	106	28_{h9}	M24	100_{m6}	210	661	106	28_{h9}	M24
X310*	110_{m6}	210	694	116	28_{h9}	M24	110_{m6}	210	694	116	28_{h9}	M24
X320**	110_{m6}	210	694	116	28_{h9}	M24	110_{m6}	210	694	116	28_{h9}	M24

LSS – X.FS.. (Solid shaft with key)						
Ø D	**L**	**OS**	**T**	**U**	**DIN 332 DR.M..**	**kg**
210_{m6}	350	703	221	50_{h9}	M30	2630
230_{m6}	410	763	241	50_{h9}	M36	2850
230_{m6}	410	811	241	50_{h9}	M36	3690
240_{m6}	410	811	252	56_{h9}	M36	3800
250_{m6}	410	847	262	56_{h9}	M36	4520
270_{m6}	470	920	282	63_{h9}	M36	5020
290_{m6}	470	920	302	63_{h9}	M36	5505
290_{m6}	470	962	302	63_{h9}	M36	6920
300_{m6}	470	962	314	70_{h9}	M36	7620
320_{m6}	470	999	334	70_{h9}	M42	8470
340_{m6}	550	1079	355	80_{h9}	M42	9370

LSS – X.FA.. (Hollow shaft with keyway)								
	Ø D2	**Ø EA**	**OA**	**T2**	**U2**	**WA**	**ISO 4017 M..**	**kg**
X220	210^{H8}	360	352.5	221.4	50^{JS9}	417	M30x90-8.8	2450
X230	210^{H8}	360	352.5	221.4	50^{JS9}	417	M30x90-8.8	2630
X240	230^{H8}	420	400.5	241.4	50^{JS9}	469	M36x110-8.8	3405
X250	240^{H8}	420	400.5	252.4	56^{JS9}	469	M36x110-8.8	3495
X260	240^{H8}	420	437	252.4	56^{JS9}	509	M36x110-8.8	4070
X270	275^{H8}	460	450	287.4	63^{JS9}	523	M36x110-8.8	4470
X280	275^{H8}	460	450	287.4	63^{JS9}	523	M36x110-8.8	4970
X290	290^{H8}	486	492	302.4	63^{JS9}	565	M36x110-8.8	6270
X300	290^{H8}	486	492	302.4	63^{JS9}	565	M36x110-8.8	6870
X310	320^{H8}	544	528.5	334.4	70^{JS9}	612	M42x130-8.8	7670
X320	320^{H8}	544	528.5	334.4	70^{JS9}	612	M42x130-8.8	8470

LSS – X.FH.. (Hollow shaft with shrink disk)								
	Ø D5	**Ø D6**	**Ø EH**	**MD**	**OH**	**WH**	**ISO 4017 M..**	**kg**
X220	210^{H7}	211^{H9}	484	497.5	352.5	562	M30x90-8.8	2555
X230	210^{H7}	211^{H9}	484	497.5	352.5	562	M30x90-8.8	2740
X240	230^{H7}	231^{H9}	558	571.5	400.5	654	M36x110-8.8	3570
X250	240^{H7}	241^{H9}	558	571.5	400.5	654	M36x110-8.8	3655
X260	250^{H7}	255^{H9}	558	608	437	694	M36x110-8.8	4220
X270	280^{H7}	285^{H9}	602	630	450	706	M36x110-8.8	4770
X280	280^{H7}	285^{H9}	602	630	450	706	M36x110-8.8	5320
X290	300^{H7}	305^{H9}	634	679	492	753	M36x110-8.8	6520
X300	300^{H7}	305^{H9}	634	679	492	753	M36x110-8.8	7120
X310	320^{H7}	325^{H9}	692	740.5	528.5	825	M42x130-8.8	8020
X320	320^{H7}	325^{H9}	692	740.5	528.5	825	M42x130-8.8	8320

X.F.. 4-stage helical gear unit
X4F120 – 210

X4FS../HU

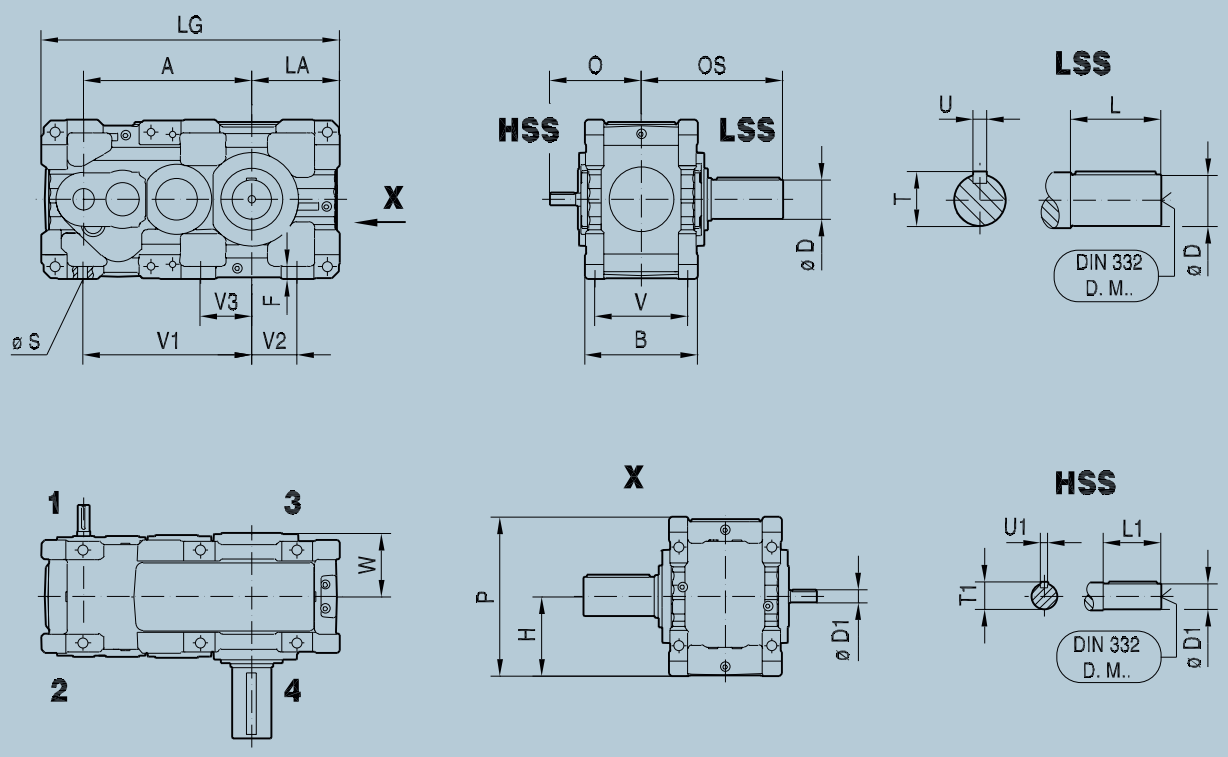

X4FA../HU

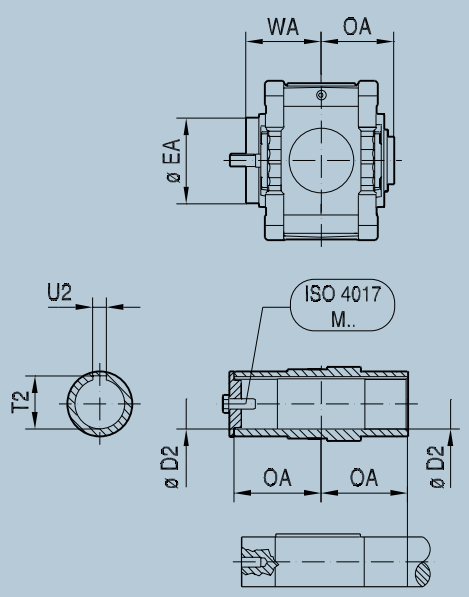

X4FH../HU

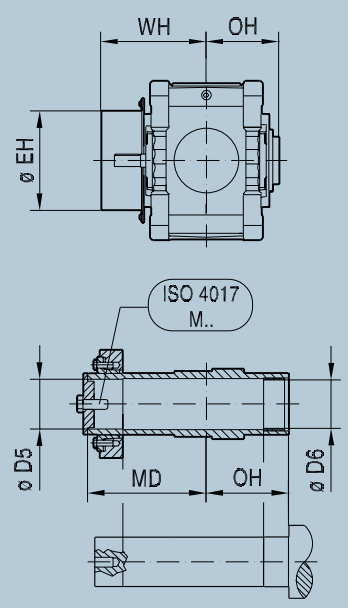

Size	A	W	F	H	LA	LG	P	Ø S	V	V1	V2	V3	W
X120	427	300	33	$225_{-0.5}$	$215_{-0.5}$	772	450	28 (4x)	245	440	105	–	174
X130	463	300	33	$225_{-0.5}$	$250_{-0.5}$	843	450	28 (4x)	245	475	140	–	174
X140	502	360	42	$265_{-0.5}$	$250_{-0.5}$	908	530	35 (4x)	290	510	110	–	202
X150	544	360	42	$265_{-0.5}$	$295_{-0.5}$	995	530	35 (4x)	290	555	155	–	202
X160	611	425	50	$315_{-0.5}$	$355_{-0.5}$	1149	630	42 (4x)	340	620	185	–	240
X170	662	425	50	$315_{-0.5}$	$355_{-0.5}$	1200	630	42 (4x)	340	670	185	–	240
X180	707	475	55	$335_{-0.5}$	$370_{-0.5}$	1254	670	42 (6x)	390	710	190	215	277
X190	739	475	55	$335_{-0.5}$	$370_{-0.5}$	1287	670	42 (6x)	390	740	190	215	277
X200	794	515	60	$375_{-0.5}$	$420_{-0.5}$	1415	750	48 (6x)	420	780	205	230	298
X210	830	515	60	$375_{-0.5}$	$420_{-0.5}$	1451	750	48 (6x)	420	815	205	230	298

HSS												
	i = 100 – 180*/i = 112 – 200/ i = 125 – 224*** **						**i = 200 – 355*/i = 224 – 400**/ i = 250 – 450*** **					
	Ø D1	**L1**	**O**	**T1**	**U1**	**DIN 332 DR. M..**	**Ø D1**	**L1**	**O**	**T1**	**U1**	**DIN 332 DR. M..**
X120*	28_{k6}	60	238	31	8_{h9}	M10	28_{k6}	60	238	31	8_{h9}	M10
X130***	28_{k6}	60	238	31	8_{h9}	M10	28_{k6}	60	238	31	8_{h9}	M10
X140*	32_{k6}	80	288	35	10_{h9}	M12	32_{k6}	80	288	35	10_{h9}	M12
X150***	32_{k6}	80	288	35	10_{h9}	M12	32_{k6}	80	288	35	10_{h9}	M12
X160*	38_{k6}	80	320	41	10_{h9}	M12	38_{k6}	80	320	41	10_{h9}	M12
X170***	38_{k6}	80	320	41	10_{h9}	M12	38_{k6}	80	320	41	10_{h9}	M12
X180*	50_{k6}	110	381	53.5	14_{h9}	M16	38_{k6}	80	351	41	10_{h9}	M12
X190**	50_{k6}	110	381	53.5	14_{h9}	M16	38_{k6}	80	351	41	10_{h9}	M12
X200*	55_{m6}	110	400	59	16_{h9}	M20	42_{k6}	110	400	45	12_{h9}	M16
X210**	55_{m6}	110	400	59	16_{h9}	M20	42_{k6}	110	400	45	12_{h9}	M16

LSS – X.FS.. (Solid shaft with key)							
Ø D	**L**	**OS**	**T**	**U**	**DIN 332 DR.M..**	**kg**
100_{m6}	210	401	106	28_{h9}	M24	355
110_{m6}	210	404	116	28_{h9}	M24	395
120_{m6}	210	432	127	32_{h9}	M24	560
130_{m6}	250	475	137	32_{h9}	M24	640
140_{m6}	250	506	148	36_{h9}	M30	960
160_{m6}	300	556	169	40_{h9}	M30	1160
170_{m6}	300	592	179	40_{h9}	M30	1410
170_{m6}	300	592	179	40_{h9}	M30	1450
180_{m6}	300	612	190	45_{h9}	M30	1900
190_{m6}	350	662	200	45_{h9}	M30	2090

LSS – X.FA.. (Hollow shaft with keyway)								
	Ø D2	**Ø EA**	**OA**	**T2**	**U2**	**WA**	**ISO 4017 M..**	**kg**
X120	95^{H8}	202	190.5	100.4	25^{JS9}	223	M24x70–8.8	335
X130	105^{H8}	222	194	111.4	28^{JS9}	225	M24x70–8.8	370
X140	115^{H8}	222	222	122.4	32^{JS9}	225	M24x70–8.8	525
X150	125^{H8}	250	224.5	132.4	32^{JS9}	255	M24x70–8.8	590
X160	135^{H8}	270	256	143.4	36^{JS9}	319	M30x90–8.8	890
X170	150^{H8}	270	256	158.4	36^{JS9}	319	M30x90–8.8	1080
X180	165^{H8}	278	292	174.4	40^{JS9}	356	M30x90–8.8	1310
X190	165^{H8}	278	292	174.4	40^{JS9}	356	M30x90–8.8	1350
X200	180^{H8}	332	319.5	190.4	45^{JS9}	383	M30x90–8.8	1815
X210	190^{H8}	332	319.5	200.4	45^{JS9}	383	M30x90–8.8	1975

LSS – X.FH.. (Hollow shaft with shrink disk)								
	Ø D5	**Ø D6**	**Ø EH**	**MD**	**OH**	**WH**	**ISO 4017 M..**	**kg**
X120	100^{H7}	101^{H9}	272	286.5	190.5	319	M24x70–8.8	345
X130	110^{H7}	111^{H9}	292	297	194	328	M24x70–8.8	385
X140	120^{H7}	121^{H9}	304	329	222	356	M24x70–8.8	550
X150	130^{H7}	131^{H9}	322	337.5	224.5	368	M24x70–8.8	620
X160	140^{H7}	141^{H9}	368	375	256	427	M30x90–8.8	920
X170	150^{H7}	151^{H9}	368	364	256	427	M30x90–8.8	1135
X180	165^{H7}	166^{H9}	382	400	292	463	M30x90–8.8	1360
X190	165^{H7}	166^{H9}	382	400	292	463	M30x90–8.8	1400
X200	180^{H7}	181^{H9}	446	450.5	319.5	517	M30x90–8.8	1885
X210	190^{H7}	191^{H9}	446	453.5	319.5	517	M30x90–8.8	2060

X.F.. 4-stage helical gear unit
X4F220 – 320

X4FS../HU

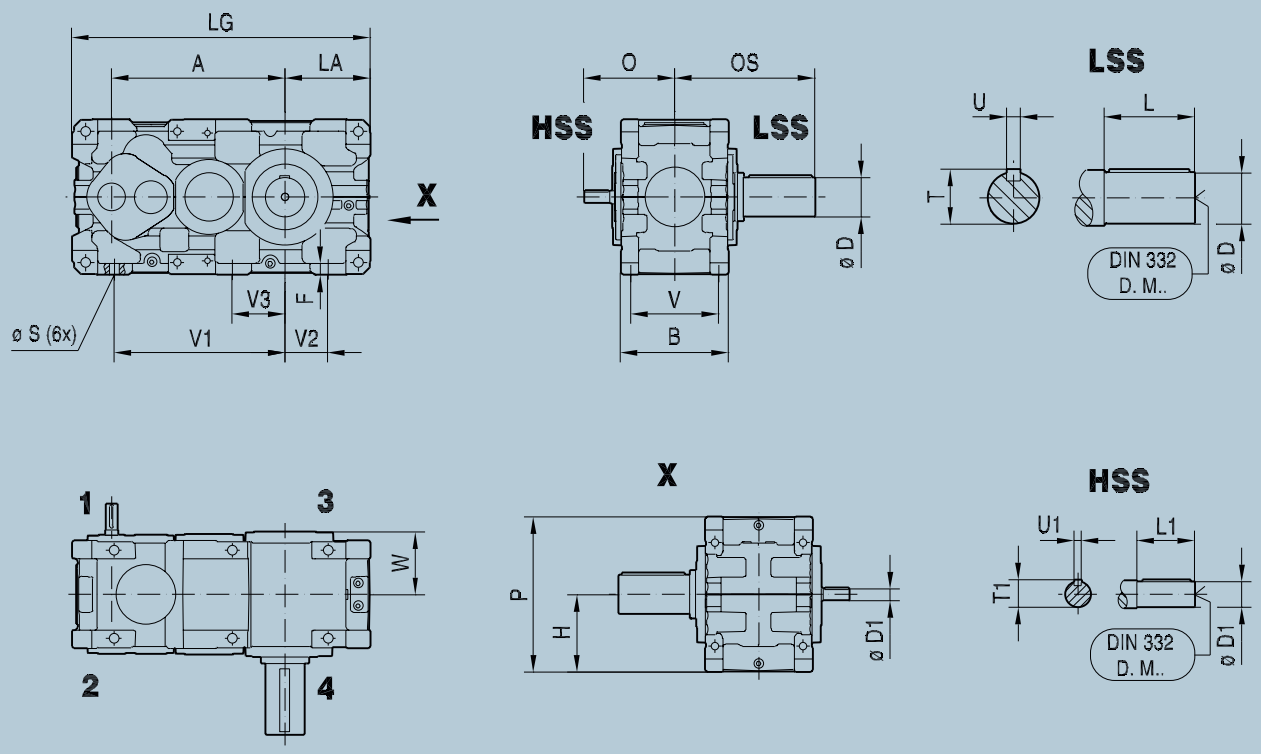

X4FA../HU

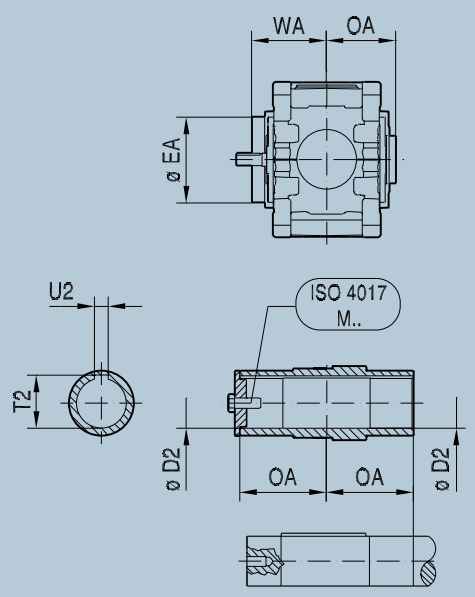

X4FH../HU

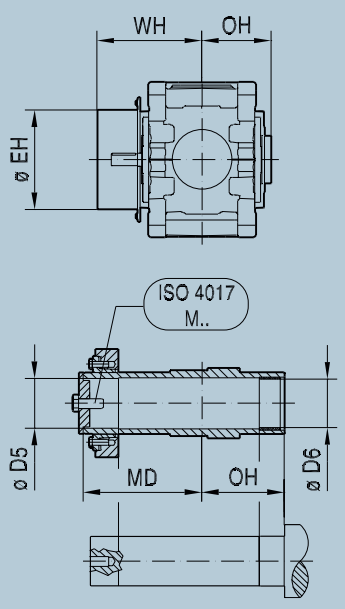

Size	A	B	F	H	LA	LG	P	Ø S	V	V1	V2	V3	W
X220	894	540	62	$425_{-0.5}$	$465_{-0.5}$	1591	850	48 (6x)	440	910	250	280	331
X230	934	540	62	$425_{-0.5}$	$465_{-0.5}$	1631	850	48 (6x)	440	950	250	280	331
X240	1004	625	68	$450_{-0.5}$	$495_{-0.5}$	1729	900	56 (6x)	510	990	250	305	377
X250	1027	625	68	$450_{-0.5}$	$495_{-0.5}$	1752	900	56 (6x)	510	1010	250	305	377
X260	1113	705	63	$500_{-0.5}$	$545_{-0.5}$	1909	1017	56 (6x)	590	1110	300	350	417
X270	1148	705	63	$500_{-0.5}$	$545_{-0.5}$	1944	1017	56 (6x)	590	1110	300	350	419
X280	1200	705	73	$555_{-0.5}$	$610_{-0.5}$	2061	1127	56 (6x)	590	1190	360	380	419
X290	1279	785	76	$580_{-0.5}$	$620_{-0.5}$	2196	1177	65 (6x)	655	1280	330	355	465
X300	1308	785	76	$580_{-0.5}$	$620_{-0.5}$	2225	1177	65 (6x)	655	1280	330	355	465
X310	1435	850	86	$630_{-0.5}$	$680_{-0.5}$	2419	1277	65 (6x)	720	1435	385	455	499
X320	1469	850	86	$630_{-0.5}$	$680_{-0.5}$	2453	1277	65 (6x)	720	1435	385	455	499

HSS	i = 100 – 180*/i = 112 – 200**						i = 200 – 355*/i = 224 – 400**					
	Ø D1	**L1**	**O**	**T1**	**U1**	**DIN 332 DR. M..**	**Ø D1**	**L1**	**O**	**T1**	**U1**	**DIN 332 DR. M..**
X220*	60_{m6}	140	457	64	18_{h9}	M20	50_{k6}	110	427	53.5	14_{h9}	M16
X230**	60_{m6}	140	457	64	18_{h9}	M20	50_{k6}	110	427	53.5	14_{h9}	M16
X240*	70_{m6}	140	502	74.5	20_{h9}	M20	55_{m6}	110	472	59	16_{h9}	M20
X250**	70_{m6}	140	502	74.5	20_{h9}	M20	55_{m6}	110	472	59	16_{h9}	M20
	i = 100 – 180*/i = 112 – 200/ i = 125 – 224*** **						**i = 200 – 355*/i = 224 – 400**/ i = 250 – 450*** **					
X260*	75_{m6}	140	543	79.5	20_{h9}	M20	60_{m6}	140	543	64	18_{h9}	M20
X270**	75_{m6}	140	543	79.5	20_{h9}	M20	60_{m6}	140	543	64	18_{h9}	M20
X280***	75_{m6}	140	543	79.5	20_{h9}	M20	60_{m6}	140	543	64	18_{h9}	M20
X290*	80_{m6}	170	614	85	22_{h9}	M20	80_{m6}	170	614	85	22_{h9}	M20
X300**	80_{m6}	170	614	85	22_{h9}	M20	80_{m6}	170	614	85	22_{h9}	M20
X310*	90_{m6}	170	645	95	25_{h9}	M24	90_{m6}	170	645	95	25_{h9}	M24
X320**	90_{m6}	170	645	95	25_{h9}	M24	90_{m6}	170	645	95	25_{h9}	M24

LSS – X.FS.. (Solid shaft with key)							
Ø D	**L**	**OS**	**T**	**U**	**DIN 332 DR.M..**	**kg**
210_{m6}	350	703	221	50_{h9}	M30	2680
230_{m6}	410	763	241	50_{h9}	M36	3040
230_{m6}	410	811	241	50_{h9}	M36	3750
240_{m6}	410	811	252	56_{h9}	M36	3875
250_{m6}	410	847	262	56_{h9}	M36	4620
270_{m6}	470	920	282	63_{h9}	M36	5120
290_{m6}	470	920	302	63_{h9}	M36	5670
290_{m6}	470	962	302	63_{h9}	M36	7070
300_{m6}	470	962	314	70_{h9}	M36	7820
320_{m6}	470	999	334	70_{h9}	M42	8670
340_{m6}	550	1079	355	80_{h9}	M42	9620

LSS – X.FA.. (Hollow shaft with keyway)								
	Ø D2	**Ø EA**	**OA**	**T2**	**U2**	**WA**	**ISO 4017 M..**	**kg**
X220	210^{H8}	360	352.5	221.4	50^{JS9}	417	M30x90-8.8	2500
X230	210^{H8}	360	352.5	221.4	50^{JS9}	417	M30x90-8.8	2820
X240	230^{H8}	420	400.5	241.4	50^{JS9}	469	M36x110-8.8	3465
X250	240^{H8}	420	400.5	252.4	56^{JS9}	469	M36x110-8.8	3570
X260	240^{H8}	420	437	252.4	56^{JS9}	509	M36x110-8.8	4170
X270	275^{H8}	460	450	287.4	63^{JS9}	523	M36x110-8.8	4620
X280	275^{H8}	460	450	287.4	63^{JS9}	523	M36x110-8.8	5120
X290	290^{H8}	486	492	302.4	63^{JS9}	565	M36x110-8.8	6370
X300	290^{H8}	486	492	302.4	63^{JS9}	565	M36x110-8.8	7070
X310	320^{H8}	544	528.5	334.4	70^{JS9}	612	M42x130-8.8	7820
X320	320^{H8}	544	528.5	334.4	70^{JS9}	612	M42x130-8.8	8470

LSS – X.FH.. (Hollow shaft with shrink disk)								
	Ø D5	**Ø D6**	**Ø EH**	**MD**	**OH**	**WH**	**ISO 4017 M..**	**kg**
X220	210^{H7}	211^{H9}	484	497.5	352.5	562	M30x90-8.8	2605
X230	210^{H7}	211^{H9}	484	497.5	352.5	562	M30x90-8.8	2930
X240	230^{H7}	231^{H9}	558	571.5	400.5	654	M36x110-8.8	3630
X250	240^{H7}	241^{H9}	558	571.5	400.5	654	M36x110–8.8	3730
X260	250^{H7}	255^{H9}	558	608	437	694	M36x110-8.8	4320
X270	280^{H7}	285^{H9}	602	630	450	706	M36x110-8.8	4870
X280	280^{H7}	285^{H9}	602	630	450	706	M36x110-8.8	5370
X290	300^{H7}	305^{H9}	634	679	492	753	M36x110-8.8	6620
X300	300^{H7}	305^{H9}	634	679	492	753	M36x110-8.8	7320
X310	320^{H7}	325^{H9}	692	740.5	528.5	825	M42x130-8.8	8170
X320	320^{H7}	325^{H9}	692	740.5	528.5	825	M42x130-8.8	8820

X.K.. bevel-helical gear units: Nominal gear unit torque M_{N2} kNm

i_N	Size														
	100	110	120	130	140	150	160	170	180	190	200	210	220	230	240
6.3	–	–	10.2	–	18.5	–	30	–	50.1	–	56.6	–	84.4	–	122
7.1	5.55	–	10.5	–	19	–	30.8	–	51	55.4	58	64.4	87.6	95.5	128
8	5.75	7.35	10.7	12.8	19.7	23.5	31.3	37.5	51.7	56.2	59.1	66.1	90.4	99	130
9	5.95	7.4	11	13.1	20.1	24	31.9	38.5	52.5	57.3	60.4	67.4	93.2	102	135
10	6.2	7.48	11.2	13.5	20.4	24.6	32.1	39.1	53.2	58.4	60.9	68.5	94.6	106	136
11.2	6.35	7.6	11.5	13.8	20.8	25.1	32.5	39.9	54.2	59.3	62.2	69.1	98	108	143
12.5	6.6	7.7	11.3	13.9	20.8	25.4	32.5	40.1	52.9	60.8	66.5	70.5	92.4	111	128
14	6.45	7.8	11.5	14.5	21	26	33	40.6	54.1	59.2	68.9	75.8	97	104	137
16	6.8	7.5	11.6	14.2	21	25.5	33.5	40.8	54.4	60.6	72.2	78.2	100	110	138
18	6.8	7.8	12	14.4	21.3	25.8	36	41.3	58	60.8	75.1	81.8	107	113	156
20	6.8	8	12.1	14.5	21.9	26.1	36	41.9	58	65	78.1	85	112	119	156
22.4	6.8	8.5	12.3	15	22	26.5	36	45	58	65	79	88.8	112	126	156
25	6.8	8.5	12.4	15.2	22	27.2	36	45	58	65	79	90	112	131	156
28	6.8	8.5	12.4	15.5	22	27.5	36	45	58	65	79	90	112	131	156
31.5	6.8	8.5	12.4	15.5	22	27.5	36	45	58	65	79	90	112	131	156
35.5	6.8	8.5	12.4	15.5	22	27.5	36	45	58	65	79	90	112	131	156
40	6.8	8.5	12.4	15.5	22	27.5	36	45	58	65	79	90	112	131	156
45	6.8	8.5	12.8	15.5	22	27.5	36	45	58	65	79	90	112	131	156
50	6.8	8.5	12.8	15.5	22	27.5	36	45	58	65	79	90	112	131	156
56	6.8	8.5	12.8	16	22	27.5	36	45	58	65	79	90	112	131	156
63	6.8	8.5	12.8	16	22	27.5	36	45	58	65	79	90	112	131	156
71	6.8	8.5	12.8	16	22	27.5	36	45	58	65	79	90	112	131	156
80	6.8	8.5	10.9	16	22	27.5	36	45	58	65	79	90	112	131	156
90	–	8.5	12.3	16	22	27.5	36	45	58	65	79	90	112	131	156
100	–	–	12.8	13.6	22	27.5	36	45	58	65	79	90	112	131	156
112	–	–	12.8	15.5	22	27.5	36	45	58	65	79	90	112	131	156
125	–	–	12.8	16	22	27.5	36	45	58	65	79	90	112	131	156
140	–	–	12.8	16	22	27.5	36	45	58	65	79	90	112	131	156
160	–	–	12.8	16	22	27.5	36	45	58	65	79	90	112	131	156
180	–	–	12.8	16	22	27.5	36	45	58	65	79	90	112	131	156
200	–	–	12.8	16	22	27.5	36	45	58	65	79	90	112	131	156
224	–	–	12.8	16	22	27.5	36	45	58	65	79	90	112	131	156
250	–	–	12.8	16	22	27.5	36	45	58	65	79	90	112	131	156
280	–	–	12.8	16	22	27.5	36	45	58	65	79	90	112	131	156
315	–	–	12.8	16	22	27.5	36	45	58	65	79	90	112	131	156
355	–	–	12.8	16	22	27.5	36	45	58	65	79	90	112	131	156
400	–	–	–	16	–	27.5	–	45	58	65	–	90	–	131	–
450	–	–	–	16	–	27.5	–	45	58	–	–	–	–	–	–

250	260	270	280	290	300	310	320	X2K..
–	–	–	–	–	–	–	–	
131	–	–	–	–	–	–	–	
137	–	–	–	–	–	–	–	
140	–	–	–	–	–	–	–	
145	–	–	–	–	–	–	–	
146	–	–	–	–	–	–	–	
154	166	–	–	240	–	368	–	
138	175	186	–	253	260	376	391	X3K..
148	185	193	209	263	273	392	398	
149	195	203	217	278	281	405	418	
162	205	212	230	292	302	422	429	
169	205	231	240	308	320	425	448	
175	205	240	260	308	345	425	457	
175	205	240	270	308	350	425	475	
175	205	240	270	308	350	425	475	
175	205	240	270	308	350	425	475	
175	205	240	270	308	350	425	475	
175	205	240	270	308	350	425	475	
175	205	240	270	308	350	425	475	
175	205	240	270	308	350	425	475	
175	205	240	270	308	350	425	475	
175	205	240	270	308	350	425	475	
175	205	240	270	308	350	425	475	
175	205	237	270	308	330	425	475	X4K..
175	205	240	264	308	350	425	475	
175	205	240	270	308	350	425	475	
175	205	240	270	308	350	425	475	
175	205	240	270	308	350	425	475	
175	205	240	270	308	350	425	475	
175	205	240	270	308	350	425	475	
175	205	240	270	308	350	425	475	
175	205	240	270	308	350	425	475	
175	205	240	270	308	350	425	475	
175	205	240	270	308	350	425	475	
175	205	240	270	308	350	425	475	
175	205	240	270	308	350	425	475	
175	–	240	270	–	350	–	475	
–	–	–	–	–	–	–	–	

Selection table

The selection table shows the nominal gear unit torque M_{N2} in kNm as a function of the size and nominal gear ratio i_N.

Bevel-helical gear unit shaft positions

The following shaft positions are possible for series X.K..:

Shaft position solid shaft

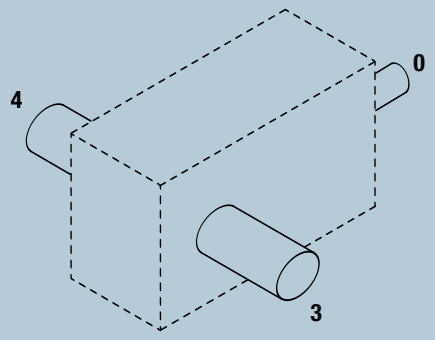

Shaft position hollow shaft

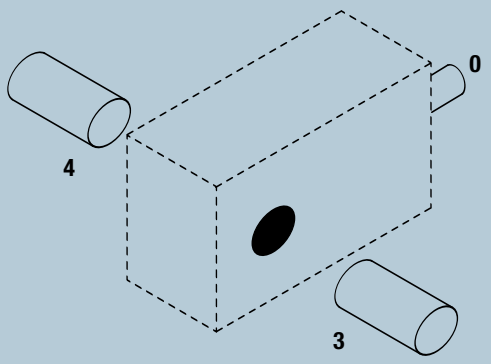

X.K.. bevel-helical gear units: Exact gear unit ratio i_{ex}

i_N	Size													
	100	110	120	130	140	150	160	170	180	190	200	210	220	230
6.3	–	–	6.36	–	6.53	–	6.38	–	6.32	–	6.4	–	6.4	–
7.1	6.88	–	7.24	–	6.98	–	7.19	–	7.07	7.05	7.26	7.25	7.07	7.25
8	7.69	7.91	7.95	7.95	8.27	8.11	7.93	7.93	8	7.92	8.11	8.21	8.11	7.96
9	8.71	8.86	9.05	9.03	8.84	8.68	8.94	8.92	8.96	8.93	9.2	9.19	8.95	9.19
10	9.75	10.02	9.85	9.93	10.1	10.27	9.69	9.86	9.77	10.04	9.91	10.4	9.91	10.09
11.2	10.64	11.22	11.21	11.28	10.8	10.99	10.92	11.08	10.95	10.91	11.24	11.22	10.94	11.22
12.5	11.91	12.24	12.72	12.31	12.35	12.54	12.35	12.05	12.57	12.26	12.45	12.71	12.56	12.32
14	13.47	13.71	14.48	13.98	13.21	13.43	13.92	13.54	14.08	14.04	14.12	14.1	13.86	14.22
16	15.08	15.5	16.36	15.9	15.89	15.34	15.53	15.35	16.17	15.77	16.32	15.96	16.15	15.61
18	17.05	17.36	18.63	18.06	16.99	16.43	17.51	17.25	18.11	18.05	18.5	18.48	17.82	18.29
20	19.09	19.62	20.02	20.45	21.13	19.73	20.23	19.3	19.74	20.29	20.56	20.92	20.64	20.08
22.4	21.09	21.97	22.79	23.23	22.6	21.13	22.8	21.7	22.1	22.04	23.31	23.28	22.78	23.37
25	24.55	24.26	25.75	25.03	26.42	26.25	24.77	25.15	25.55	24.77	25.72	26.36	25.28	25.66
28	27.12	28.26	29.32	28.43	28.25	28.1	27.91	28.26	28.61	28.53	29.17	29.13	27.9	28.63
31.5	30.35	31.21	30.96	32.19	33.46	32.81	30.94	30.78	32.36	32.06	31.97	32.97	32.02	31.43
35.5	34.35	34.94	35.25	36.56	35.78	35.13	34.87	34.6	36.24	36.14	36.26	36.2	35.34	36.26
40	38.45	39.53	40.01	38.71	40.78	41.56	39.12	38.45	38.93	40.61	39.61	40.99	39.55	39.82
45	42.96	44.26	45.55	43.96	43.61	44.5	44.08	43.22	43.6	43.48	44.92	44.85	43.65	44.78
50	48.08	49.44	47.92	50.02	49.82	50.65	48.46	48.62	47.57	48.85	48.39	50.78	48.32	49.17
56	52.49	55.35	54.55	56.81	53.28	54.23	54.62	54.64	53.27	53.11	54.88	54.79	53.33	54.71
63	58.74	60.4	61.35	59.9	63.79	61.88	62.05	60.23	60.9	59.68	61.95	62.03	61.86	60.08
71	67.2	67.62	69.84	68.03	68.21	66.26	69.92	67.69	68.2	68	70.26	70.15	68.27	70.05
80	75.21	77.33	82.12	76.69	83.36	79.22	81.9	77.11	79.89	76.41	79.69	79.42	81.61	76.91
90	–	86.58	93.49	87.09	89.14	84.83	92.3	86.67	89.46	89.21	90.37	90.23	90.07	92.41
100	–	–	104.18	102.65	104.2	103.52	100.25	101.79	103.42	100.24	99.7	102.16	99.97	101.47
112	–	–	118.6	116.58	111.42	110.85	112.98	114.4	115.81	115.48	113.07	112.9	110.34	113.21
125	–	–	125.27	130.23	127	129.41	126.75	124.6	124.41	129.76	123.51	127.82	123.47	124.31
140	–	–	142.6	147.9	135.81	138.56	142.85	140.03	139.32	138.93	140.07	139.86	136.27	139.81
160	–	–	149.93	156.58	158.84	157.72	152.4	157.54	153.68	156.11	152.66	158.34	156.11	153.52
180	–	–	170.68	177.83	169.85	168.89	171.76	177.05	172.1	171.61	173.13	172.87	172.29	176.77
200	–	–	206.42	187.42	206.44	197.26	198.63	189.42	204.9	192.84	197.54	195.72	198.08	194.1
224	–	–	234.98	212.85	220.76	211.23	223.85	212.88	229.46	228.8	224.02	223.68	218.61	224.29
250	–	–	248.19	258.02	251.62	256.39	251.14	246.86	246.49	257.1	244.71	253.24	244.62	246.28
280	–	–	282.53	293.04	269.07	274.54	283.03	277.45	276.03	275.25	277.52	277.1	269.99	277
315	–	–	297.06	310.23	314.7	312.49	301.95	312.13	304.49	309.29	302.47	313.72	309.29	304.16
355	–	–	338.17	352.34	336.53	334.61	340.3	350.79	340.98	340.02	343.03	342.51	341.36	350.23
400	–	–	–	371.33	–	390.84	–	375.29	–	382.06	–	387.77	–	384.57
450	–	–	–	421.72	–	418.5	–	421.78	–	–	–	–	–	–

240	250	260	270	280	290	300	310	320	X2K..
6.38	–	–	–	–	–	–	–	–	
7.34	6.86	–	–	–	–	–	–	–	
8.09	7.88	–	–	–	–	–	–	–	
9.31	8.69	–	–	–	–	–	–	–	
9.82	9.99	–	–	–	–	–	–	–	
11.31	10.56	–	–	–	–	–	–	–	
11.92	12.13	12.59	–	–	12.37	–	13.23	–	
13.71	12.8	14.24	13.83	–	13.98	13.18	14.58	14.13	**X3K..**
15.32	14.71	16.19	15.48	15.48	15.91	14.94	17.02	15.48	
17.64	16.47	18.32	17.78	17.34	17.98	16.95	18.75	18.17	
20.36	18.92	21.1	19.91	19.91	20.45	19.21	21.2	19.9	
23.44	21.88	23.86	23.17	22.3	23.12	21.79	23.35	22.63	
25.64	25.14	26.09	25.94	25.94	26.69	24.7	26.3	24.79	
29.51	27.55	29.51	28.65	29.05	30.17	28.44	28.97	28.08	
32.47	31.64	30.68	32.07	32.07	32	32.24	32.89	30.76	
37.38	34.89	34.7	33.7	35.92	36.17	34.1	36.23	35.12	
39.96	40.08	38.86	37.72	37.72	40.09	38.65	41.69	38.46	
46	42.95	43.96	42.68	42.25	45.31	42.71	45.93	44.52	
48.83	49.33	47.48	47.78	47.78	48.97	48.41	50.63	48.76	
56.2	52.47	53.7	52.14	53.51	55.35	52.18	55.78	54.06	
62.51	60.27	60.78	58.37	58.37	62.7	59.14	64.44	59.21	
71.95	67.18	68.75	66.76	65.38	70.87	66.81	70.99	68.8	
82.39	77.17	84.73	74.73	74.73	81.36	75.72	85.15	75.36	
94.83	88.53	95.84	93.07	83.7	91.96	86.7	93.81	90.93	**X4K..**
103.71	101.7	104.76	104.18	104.18	106.18	98.25	105.65	99.58	
119.37	111.45	118.5	115.07	116.68	120.01	113.15	116.4	112.81	
127.64	128.02	123.21	128.81	128.81	127.3	128.23	132.12	123.56	
146.91	137.16	139.37	135.33	144.27	143.88	135.65	145.56	141.08	
153.55	157.56	152.63	151.49	151.49	157.21	153.73	162.61	154.51	
176.74	165.01	172.65	167.65	169.67	177.69	167.52	179.15	173.63	
205.47	189.54	203.69	187.66	187.66	206.45	189.86	209.33	190.17	
236.5	220.81	230.4	223.73	210.18	233.34	219.99	230.61	223.52	
252.89	253.64	239.55	250.44	250.44	247.5	249.32	261.77	244.81	
291.08	271.76	270.97	263.12	280.49	279.74	263.73	288.39	279.52	
304.22	312.17	296.76	294.53	294.53	305.67	298.9	322.18	306.14	
350.17	326.93	335.68	325.95	329.88	345.48	325.71	354.94	344.02	
–	375.54	–	364.87	364.87	–	369.14	–	376.78	
–	–	–	–	408.66	–	–	–	–	

Exact gear unit ratio i_{ex}

The table shows the exact gear unit ratio i_{ex} in relation to the size and nominal gear ratio i_N.

SEW-EURODRIVE distinguishes between two housing designs that are used for X series horizontal gear units: Horizontal housing /HH and universal housing /HU.

The dimension sheets found in this booklet show housings in universal design that can be used in all mounting positions (M1 – M6). Dimension sheets for X gear units with horizontal housing can be found in the product catalog for X series industrial gear units.

X.K.. 2-stage bevel-helical gear unit
X2K100 – 210

X2KS../HU

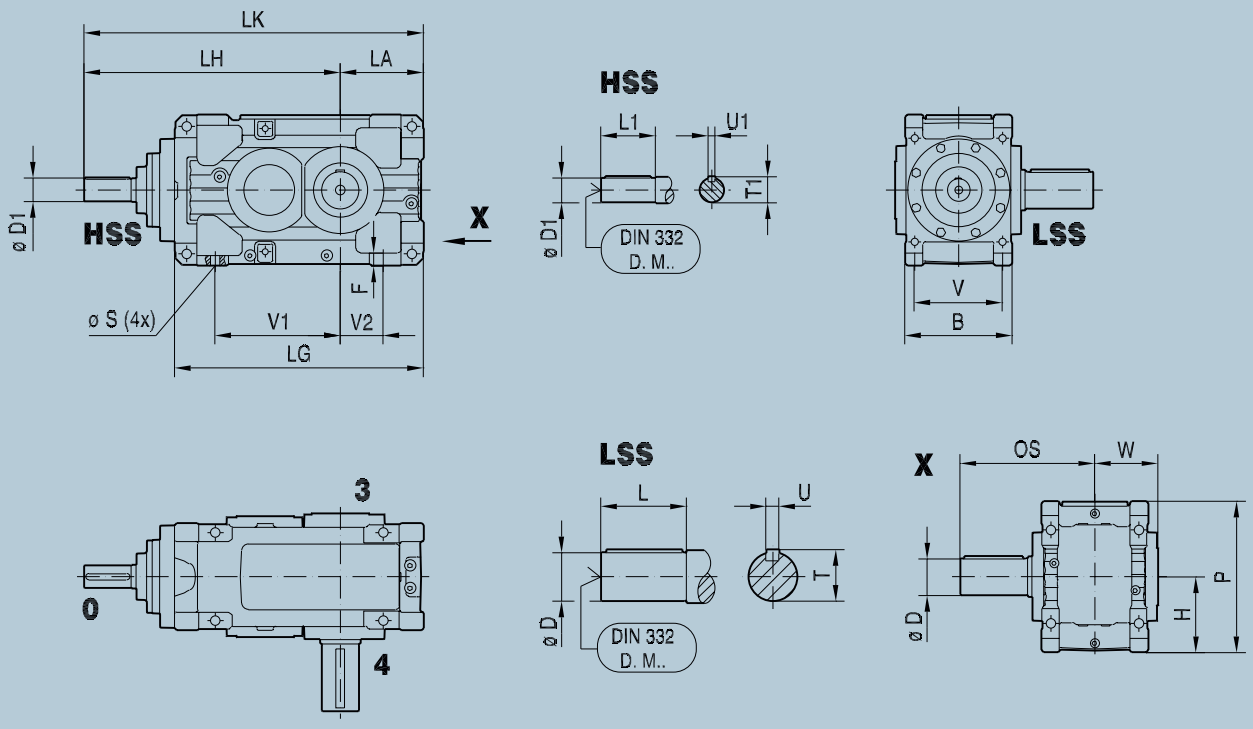

X2KA../HU

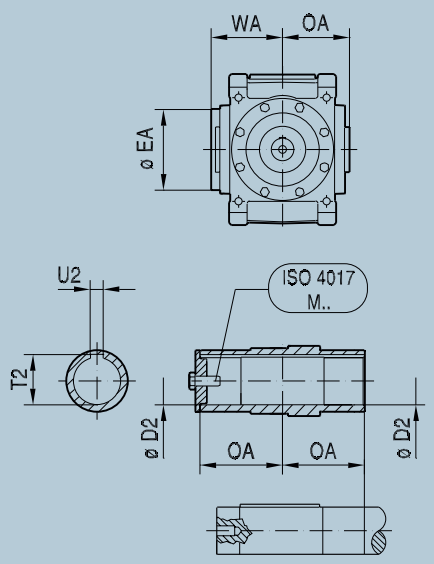

X2KH../HU

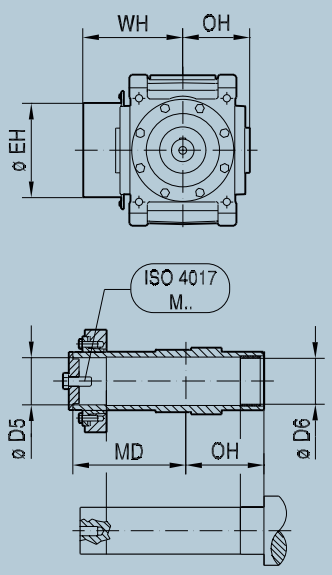

Size	B	F	H	LA	LG	LH	LK	P	Ø S	V	V1	V2	W
X100	260	29	$190_{-0.5}$	$190_{-0.5}$	601	655	845	380	24 (4x)	210	315	90	153
X110	260	29	$190_{-0.5}$	$215_{-0.5}$	646	675	890	380	24 (4x)	210	335	115	153
X120	300	33	$225_{-0.5}$	$215_{-0.5}$	697	752	967	450	28 (4x)	245	370	105	174
X130	300	33	$225_{-0.5}$	$250_{-0.5}$	768	788	1038	450	28 (4x)	245	405	140	174
X140	360	42	$265_{-0.5}$	$250_{-0.5}$	784	816	1066	530	35 (4x)	290	390	110	202
X150	360	42	$265_{-0.5}$	$295_{-0.5}$	871	858	1153	530	35 (4x)	290	435	155	202
X160	425	50	$315_{-0.5}$	$355_{-0.5}$	1023	1010	1365	630	42 (4x)	340	495	185	240
X170	425	50	$315_{-0.5}$	$355_{-0.5}$	1074	1061	1416	630	42 (4x)	340	545	185	240
X180	475	55	$335_{-0.5}$	$370_{-0.5}$	1105	1137	1507	670	42 (4x)	390	555	190	277
X190	475	55	$335_{-0.5}$	$370_{-0.5}$	1137	1169	1539	670	42 (4x)	390	585	190	277
X200	515	60	$375_{-0.5}$	$420_{-0.5}$	1241	1268	1688	750	48 (4x)	420	605	205	298
X210	515	60	$375_{-0.5}$	$420_{-0.5}$	1277	1304	1724	750	48 (4x)	420	640	205	298

HSS					
	Ø D1	**L1**	**T1**	**U1**	**DIN 332 DR. M..**
X100	50_{k6}	110	53.5	14_{h9}	M16
X110	50_{k6}	110	53.5	14_{h9}	M16
X120	60_{m6}	140	64	18_{h9}	M20
X130	60_{m6}	140	64	18_{h9}	M20
X140	70_{m6}	140	74.5	20_{h9}	M20
X150	70_{m6}	140	74.5	20_{h9}	M20
X160	85_{m6}	170	90	22_{h9}	M20
X170	85_{m6}	170	90	22_{h9}	M20
X180	100_{m6}	210	106	28_{h9}	M24
X190	100_{m6}	210	106	28_{h9}	M24
X200	110_{m6}	210	116	28_{h9}	M24
X210	110_{m6}	210	116	28_{h9}	M24

LSS – X.KS.. (Solid shaft with key)							
	Ø D	**L**	**OS**	**T**	**U**	**DIN 332 DR. M..**	**kg**
X100	80_{m6}	170	343	85	22_{h9}	M20	235
X110	90_{m6}	170	346	95	25_{h9}	M24	250
X120	100_{m6}	210	401	106	28_{h9}	M24	350
X130	110_{m6}	210	404	116	28_{h9}	M24	405
X140	120_{m6}	210	432	127	32_{h9}	M24	560
X150	130_{m6}	250	475	137	32_{h9}	M24	650
X160	140_{m6}	250	506	148	36_{h9}	M30	995
X170	160_{m6}	300	556	169	40_{h9}	M30	1115
X180	170_{m6}	300	592	179	40_{h9}	M30	1365
X190	170_{m6}	300	592	179	40_{h9}	M30	1480
X200	180_{m6}	300	612	190	45_{h9}	M30	1910
X210	190_{m6}	350	662	200	45_{h9}	M30	2020

LSS – X.KA.. (Hollow shaft with keyway)								
	Ø D2	**Ø EA**	**OA**	**T2**	**U2**	**WA**	**ISO 4017 M..**	**kg**
X100	75^{H8}	158	173	79.9	20^{JS9}	207	M20x60-8.8	225
X110	85^{H8}	170	176	90.4	22^{JS9}	209	M24x70-8.8	240
X120	95^{H8}	202	190.5	100.4	25^{JS9}	223	M24x70-8.8	330
X130	105^{H8}	222	194	111.4	28^{JS9}	225	M24x70-8.8	380
X140	115^{H8}	222	222	122.4	32^{JS9}	225	M24x70-8.8	525
X150	125^{H8}	250	224.5	132.4	32^{JS9}	255	M24x70-8.8	600
X160	135^{H8}	270	256	143.4	36^{JS9}	319	M30x90-8.8	925
X170	150^{H8}	270	256	158.4	36^{JS9}	319	M30x90-8.8	1035
X180	165^{H8}	278	292	174.4	40^{JS9}	356	M30x90-8.8	1265
X190	165^{H8}	278	292	174.4	40^{JS9}	356	M30x90-8.8	1380
X200	180^{H8}	332	319.5	190.4	45^{JS9}	383	M30x90-8.8	1825
X210	190^{H8}	332	319.5	200.4	45^{JS9}	383	M30x90-8.8	1905

LSS – X.KH.. (Hollow shaft with shrink disk)								
	Ø D5	**Ø D6**	**Ø EH**	**MD**	**OH**	**WH**	**ISO 4017 M..**	**kg**
X100	80^{H7}	81^{H9}	220	261	173	294	M24x70-8.8	235
X110	90^{H7}	91^{H9}	225	265	176	298	M24x70-8.8	250
X120	100^{H7}	101^{H9}	272	286.5	190.5	319	M24x70-8.8	340
X130	110^{H7}	111^{H9}	292	297	194	328	M24x70-8.8	395
X140	120^{H7}	121^{H9}	304	329	222	356	M24x70-8.8	550
X150	130^{H7}	131^{H9}	322	337.5	224.5	368	M24x70-8.8	630
X160	140^{H7}	141^{H9}	368	375	256	427	M30x90-8.8	955
X170	150^{H7}	151^{H9}	368	364	256	427	M30x90-8.8	1090
X180	165^{H7}	166^{H9}	382	400	292	463	M30x90-8.8	1315
X190	165^{H7}	166^{H9}	382	400	292	463	M30x90-8.8	1430
X200	180^{H7}	181^{H9}	446	450.5	319.5	517	M30x90-8.8	1895
X210	190^{H7}	191^{H9}	446	453.5	319.5	517	M30x90-8.8	1990

X.K.. 2-stage bevel-helical gear unit
X2K220 – 250

X2KS../HU

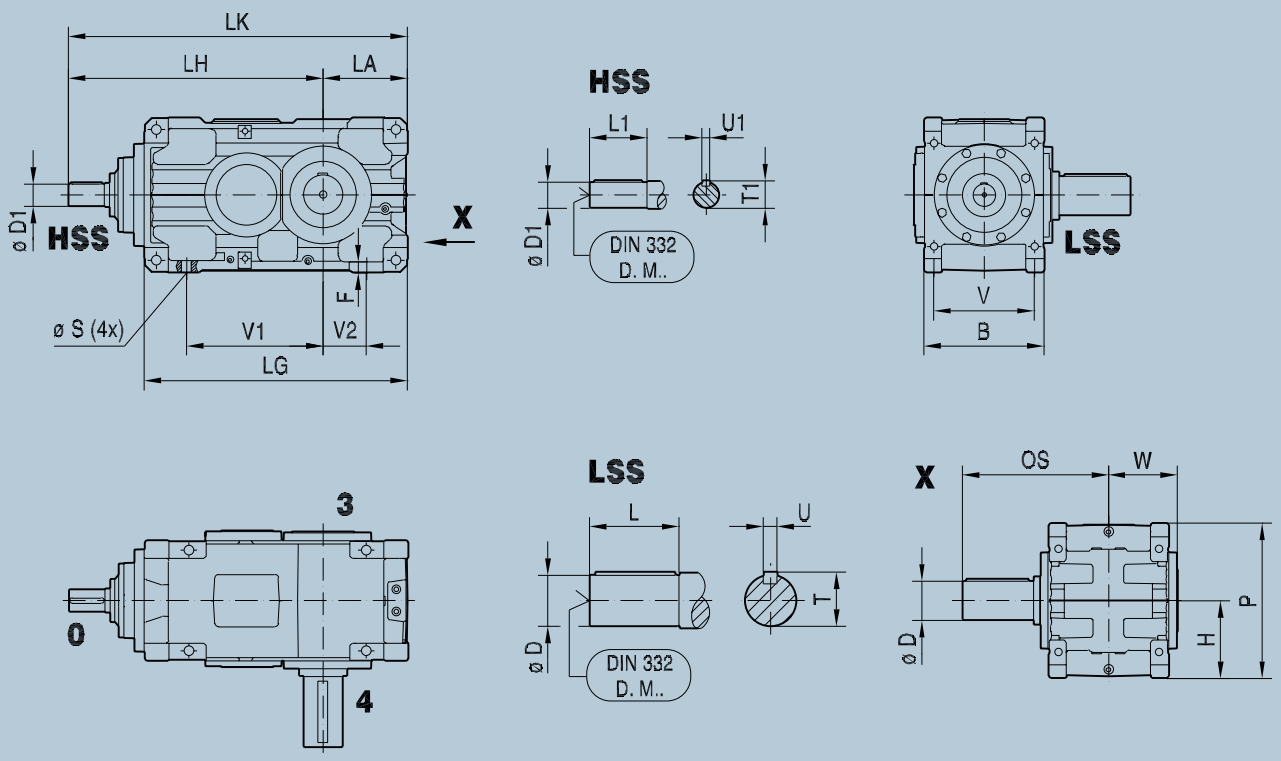

X2KA../HU

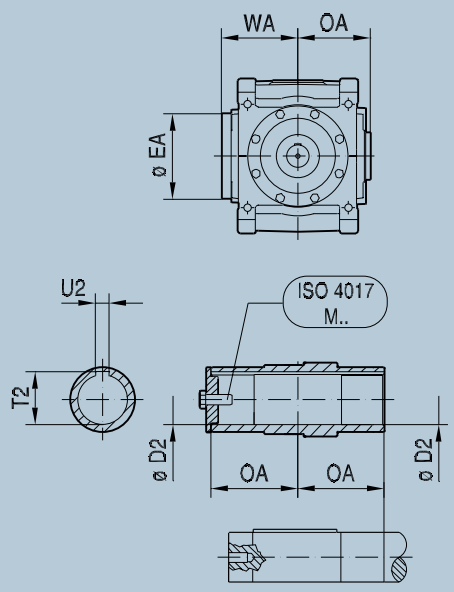

X2KH../HU

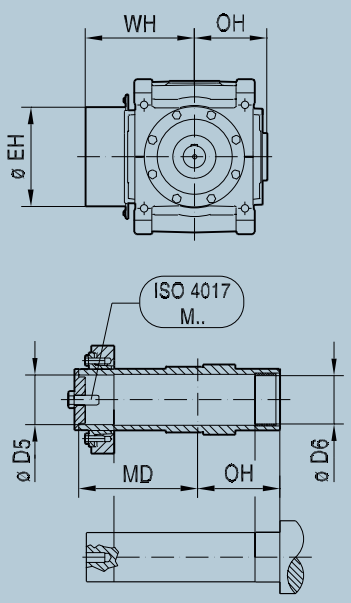

Size	B	F	H	LA	LG	LH	LK	P	Ø S	V	V1	V2	W
X220	610	62	$425_{-0.5}$	$465_{-0.5}$	1412	1436	1901	850	48 (4x)	510	730	250	370
X230	610	62	$425_{-0.5}$	$465_{-0.5}$	1452	1476	1941	850	48 (4x)	510	770	250	370
X240	700	68	$450_{-0.5}$	$495_{-0.5}$	1531	1476	1971	900	56 (4x)	585	780	250	421
X250	700	68	$450_{-0.5}$	$495_{-0.5}$	1554	1499	1994	900	56 (4x)	585	805	250	421

HSS					
	Ø D1	**L1**	**T1**	**U1**	**DIN 332 DR. M..**
X220	120_{m6}	210	127	32_{h9}	M24
X230	120_{m6}	210	127	32_{h9}	M24
X240	130_{m6}	210	137	32_{h9}	M24
X250	130_{m6}	210	137	32_{h9}	M24

LSS – X.KS.. (Solid shaft with key)							
	Ø D	**L**	**OS**	**T**	**U**	**DIN 332 DR. M..**	**kg**
X220	210_{m6}	350	738	221	50_{h9}	M30	2860
X230	230_{m6}	410	798	241	50_{h9}	M36	3040
X240	230_{m6}	410	848	241	50_{h9}	M36	3940
X250	240_{m6}	410	848	252	56_{h9}	M36	3945

LSS – X.KA.. (Hollow shaft with keyway)								
	Ø D2	**Ø EA**	**OA**	**T2**	**U2**	**WA**	**ISO 4017 M..**	**kg**
X220	210^{H8}	360	387.5	221.4	50^{JS9}	452	M30x90-8.8	2665
X230	210^{H8}	360	387.5	221.4	50^{JS9}	452	M30x90-8.8	2810
X240	230^{H8}	420	438	241.4	50^{JS9}	507	M36x110-8.8	3635
X250	240^{H8}	420	438	252.4	56^{JS9}	507	M36x110-8.8	3620

LSS – X.KH.. (Hollow shaft with shrink disk)								
	Ø D5	**Ø D6**	**Ø EH**	**MD**	**OH**	**WH**	**ISO 4017 M..**	**kg**
X220	210^{H7}	211^{H9}	484	533	387.5	597	M30x90-8.8	2775
X230	210^{H7}	211^{H9}	484	533	387.5	597	M30x90-8.8	2915
X240	230^{H7}	231^{H9}	558	609	438	692	M36x110-8.8	3800
X250	240^{H7}	241^{H9}	558	609	438	692	M36x110-8.8	3780

X.K.. 3-stage bevel-helical gear unit
X3K100 – 210

X3KS../HU

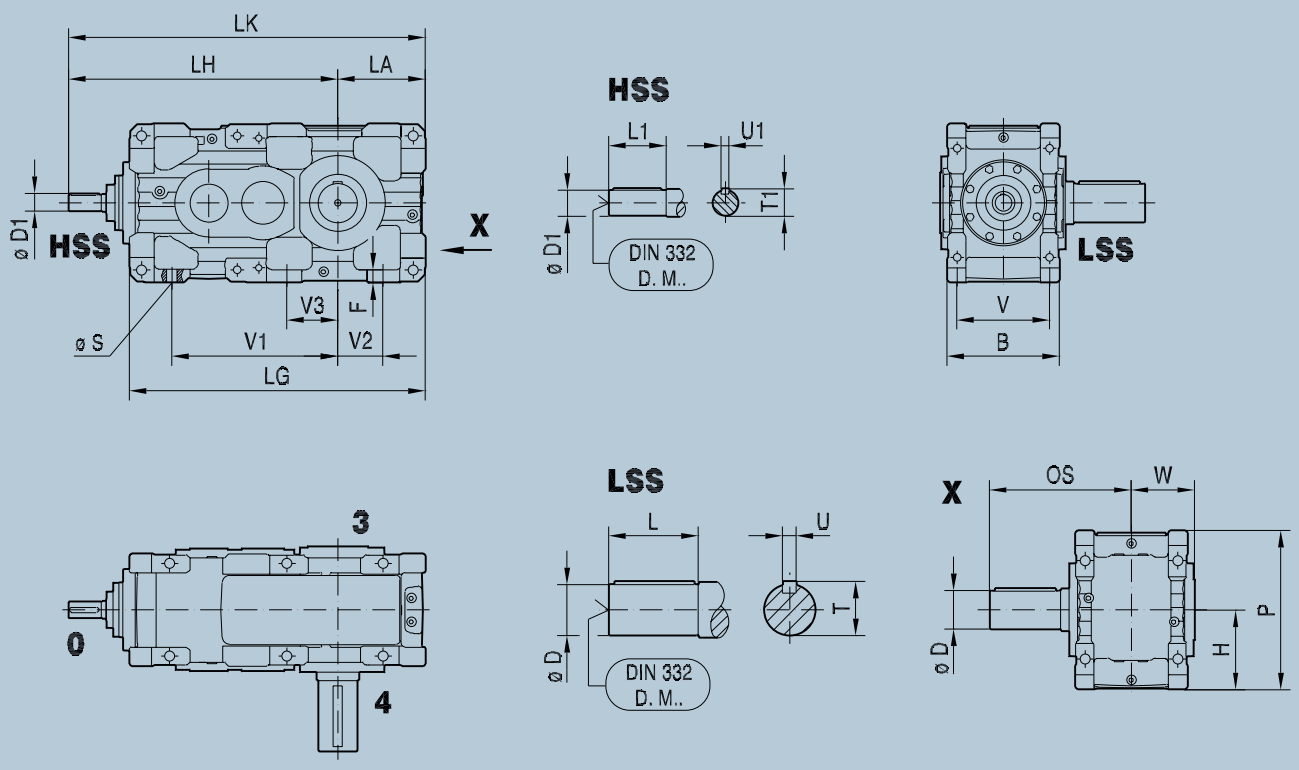

X3KA../HU

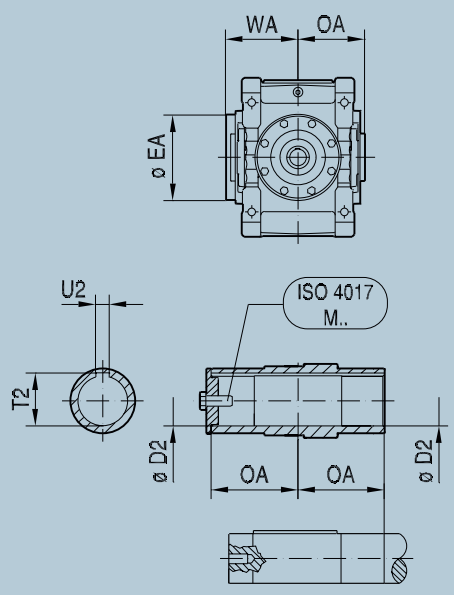

X3KH../HU

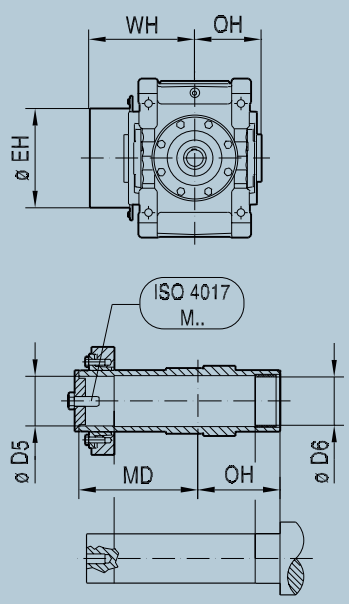

Size	B	F	H	LA	LG	LH	LK	P	Ø S	V	V1	V2	V3	W
X100	260	29	$190_{-0.5}$	$190_{-0.5}$	658	632	822	380	24 (4x)	210	370	90	–	153
X110	260	29	$190_{-0.5}$	$215_{-0.5}$	703	652	867	380	24 (4x)	210	390	115	–	153
X120	300	33	$225_{-0.5}$	$215_{-0.5}$	767	745	960	450	28 (4x)	245	440	105	–	174
X130	300	33	$225_{-0.5}$	$250_{-0.5}$	838	781	1031	450	28 (4x)	245	475	140	–	174
X140	360	42	$265_{-0.5}$	$250_{-0.5}$	903	879	1129	530	35 (4x)	290	510	110	–	202
X150	360	42	$265_{-0.5}$	$295_{-0.5}$	990	921	1216	530	35 (4x)	290	555	155	–	202
X160	425	50	$315_{-0.5}$	$355_{-0.5}$	1144	1036	1391	630	42 (4x)	340	620	185	–	240
X170	425	50	$315_{-0.5}$	$355_{-0.5}$	1195	1087	1442	630	42 (4x)	340	670	185	–	240
X180	475	55	$335_{-0.5}$	$370_{-0.5}$	1249	1135	1505	670	42 (6x)	390	710	190	215	277
X190	475	55	$335_{-0.5}$	$370_{-0.5}$	1281	1167	1537	670	42 (6x)	390	740	190	215	277
X200	515	60	$375_{-0.5}$	$420_{-0.5}$	1409	1286	1706	750	48 (6x)	420	780	205	230	298
X210	515	60	$375_{-0.5}$	$420_{-0.5}$	1445	1322	1742	750	48 (6x)	420	815	205	230	298

HSS					
	Ø D1	**L1**	**T1**	**U1**	**DIN 332 DR. M..**
X100	32_{k6}	80	35	10_{h9}	M12
X110	32_{k6}	80	35	10_{h9}	M12
X120	38_{k6}	100	41	10_{h9}	M12
X130	38_{k6}	100	41	10_{h9}	M12
X140	50_{k6}	110	53.5	14_{h9}	M16
X150	50_{k6}	110	53.5	14_{h9}	M16
X160	60_{m6}	140	64	18_{h9}	M20
X170	60_{m6}	140	64	18_{h9}	M20
X180	70_{m6}	140	74.5	20_{h9}	M20
X190	70_{m6}	140	74.5	20_{h9}	M20
X200	80_{m6}	170	85	22_{h9}	M20
X210	80_{m6}	170	85	22_{h9}	M20

LSS – X.KS.. (Solid shaft with key)							
	Ø D	**L**	**OS**	**T**	**U**	**DIN 332 DR. M..**	**kg**
X100	80_{m6}	170	343	85	22_{h9}	M20	235
X110	90_{m6}	170	346	95	25_{h9}	M24	255
X120	100_{m6}	210	401	106	28_{h9}	M24	360
X130	110_{m6}	210	404	116	28_{h9}	M24	410
X140	120_{m6}	210	432	127	32_{h9}	M24	600
X150	130_{m6}	250	475	137	32_{h9}	M24	640
X160	140_{m6}	250	506	148	36_{h9}	M30	985
X170	160_{m6}	300	556	169	40_{h9}	M30	1130
X180	170_{m6}	300	592	179	40_{h9}	M30	1400
X190	170_{m6}	300	592	179	40_{h9}	M30	1510
X200	180_{m6}	300	612	190	45_{h9}	M30	2020
X210	190_{m6}	350	662	200	45_{h9}	M30	2120

LSS – X.KA.. (Hollow shaft with keyway)								
	Ø D2	**Ø EA**	**OA**	**T2**	**U2**	**WA**	**ISO 4017 M..**	**kg**
X100	75^{H8}	158	173	79.9	20^{JS9}	207	M20x60-8.8	225
X110	85^{H8}	170	176	90.4	22^{JS9}	209	M24x70-8.8	245
X120	95^{H8}	202	190.5	100.4	25^{JS9}	223	M24x70-8.8	340
X130	105^{H8}	222	194	111.4	28^{JS9}	225	M24x70-8.8	385
X140	115^{H8}	222	222	122.4	32^{JS9}	225	M24x70-8.8	565
X150	125^{H8}	250	224.5	132.4	32^{JS9}	255	M24x70-8.8	590
X160	135^{H8}	270	256	143.4	36^{JS9}	319	M30x90-8.8	915
X170	150^{H8}	270	256	158.4	36^{JS9}	319	M30x90-8.8	1050
X180	165^{H8}	278	292	174.4	40^{JS9}	356	M30x90-8.8	1300
X190	165^{H8}	278	292	174.4	40^{JS9}	356	M30x90-8.8	1410
X200	180^{H8}	332	319.5	190.4	45^{JS9}	383	M30x90-8.8	1935
X210	190^{H8}	332	319.5	200.4	45^{JS9}	383	M30x90-8.8	2005

LSS – X.KH.. (Hollow shaft with shrink disk)								
	Ø D5	**Ø D6**	**Ø EH**	**MD**	**OH**	**WH**	**ISO 4017 M..**	**kg**
X100	80^{H7}	81^{H9}	220	261	173	294	M24x70-8.8	235
X110	90^{H7}	91^{H9}	225	265	176	298	M24x70-8.8	255
X120	100^{H7}	101^{H9}	272	286.5	190.5	319	M24x70-8.8	350
X130	110^{H7}	111^{H9}	292	297	194	328	M24x70-8.8	400
X140	120^{H7}	121^{H9}	304	329	222	356	M24x70-8.8	590
X150	130^{H7}	131^{H9}	322	337.5	224.5	368	M24x70-8.8	620
X160	140^{H7}	141^{H9}	368	375	256	427	M30x90-8.8	945
X170	150^{H7}	151^{H9}	368	364	256	427	M30x90-8.8	1105
X180	165^{H7}	166^{H9}	382	400	292	463	M30x90-8.8	1350
X190	165^{H7}	166^{H9}	382	400	292	463	M30x90-8.8	1460
X200	180^{H7}	181^{H9}	446	450.5	319.5	517	M30x90-8.8	2005
X210	190^{H7}	191_{H9}	446	453.5	319.5	517	M30x90-8.8	2090

X.K.. 3-stage bevel-helical gear unit
X3K220 – 320

X3KS../HU

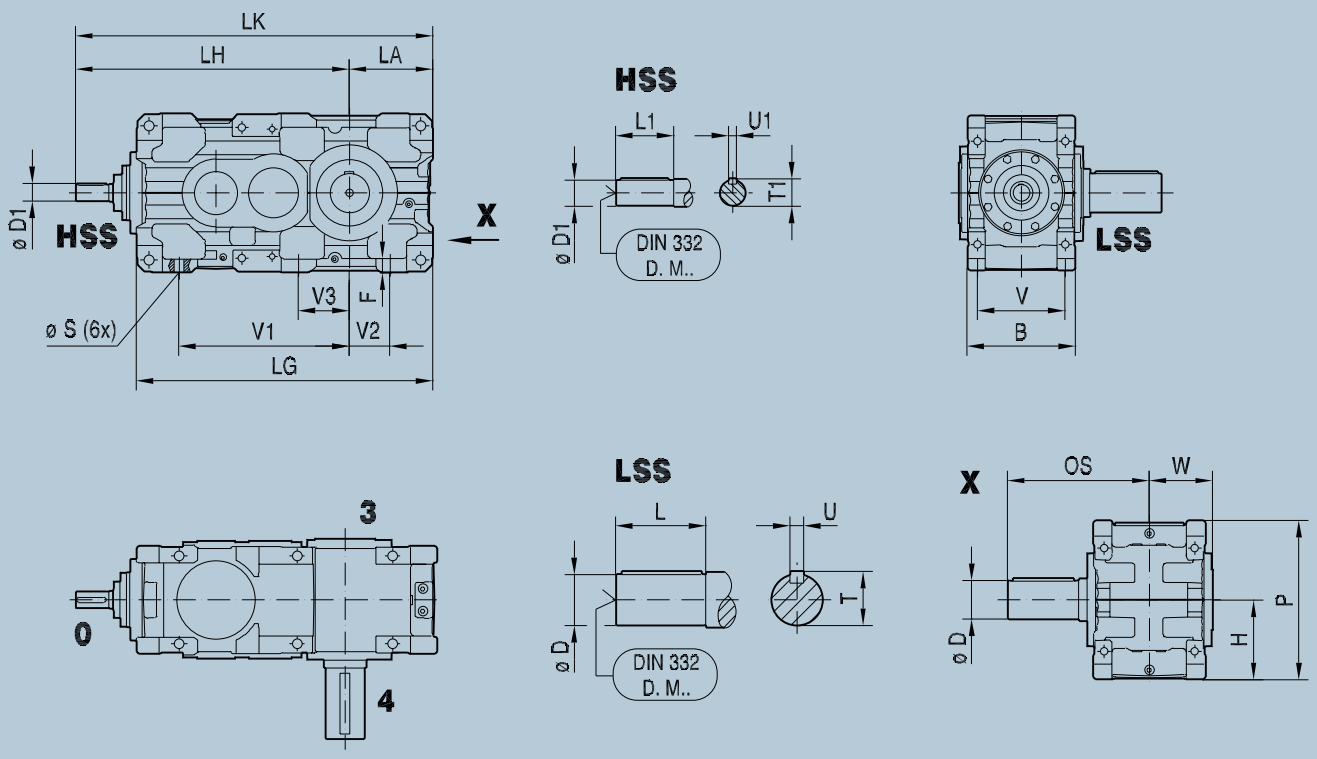

X3KA../HU

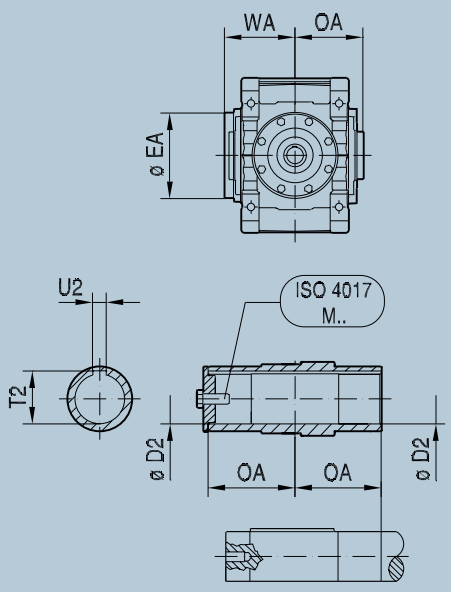

X3KH../HU

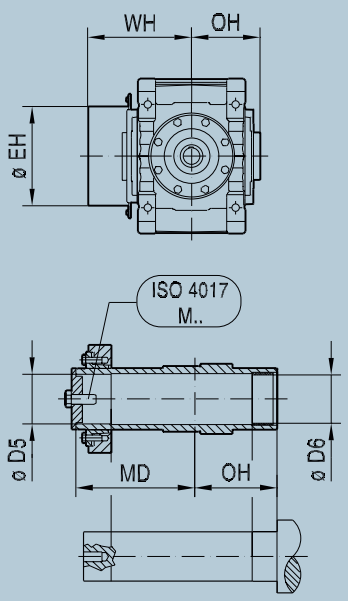

Size	B	F	H	LA	LG	LH	LK	P	Ø S	V	V1	V2	V3	W
X220	540	62	$425_{-0.5}$	$465_{-0.5}$	1584	1430	1895	850	48 (6x)	440	910	250	280	331
X230	540	62	$425_{-0.5}$	$465_{-0.5}$	1624	1470	1935	850	48 (6x)	440	950	250	280	331
X240	625	68	$450_{-0.5}$	$495_{-0.5}$	1721	1597	2092	900	56 (6x)	510	990	250	305	377
X250	625	68	$450_{-0.5}$	$495_{-0.5}$	1744	1620	2115	900	56 (6x)	510	1010	250	305	377
X260	705	73	$500_{-0.5}$	$545_{-0.5}$	1900	1767	2312	1017	56 (6x)	590	1110	300	350	417
X270	705	73	$500_{-0.5}$	$545_{-0.5}$	1935	1802	2347	1017	56 (6x)	590	1110	300	350	419
X280	705	73	$555_{-0.5}$	$610_{-0.5}$	2052	1854	2464	1127	56 (6x)	590	1190	360	380	419
X290	785	86	$580_{-0.5}$	$620_{-0.5}$	2187	2021	2641	1177	65 (6x)	655	1280	330	355	465
X300	785	86	$580_{-0.5}$	$620_{-0.5}$	2216	2050	2670	1177	65 (6x)	655	1280	330	355	465
X310	850	86	$630_{-0.5}$	$680_{-0.5}$	2410	2135	2815	1277	65 (6x)	720	1435	385	455	499
X320	850	86	$630_{-0.5}$	$680_{-0.5}$	2444	2169	2849	1277	65 (6x)	720	1435	385	455	499

HSS

	Ø D1	L1	T1	U1	DIN 332 DR. M..	i
X220	85_{m6}	170	90	22_{h9}	M20	–
X230	85_{m6}	170	90	22_{h9}	M20	–
X240	100_{m6}	210	106	28_{h9}	M24	–
X250	100_{m6}	210	106	28_{h9}	M24	–
X260	110_{m6}	210	116	28_{h9}	M24	–
X270	110_{m6}	210	116	28_{h9}	M24	–
X280	110_{m6}	210	116	28_{h9}	M24	–
X290	120_{m6}	210	127	32_{h9}	M24	–
X300	120_{m6}	210	127	32_{h9}	M24	–
X310	130_{m6}	250	137	32_{h9}	M24	i = 12.5 – 35.5*
	130_{m6}	210	137	32_{h9}	M24	i = 40 – 71**
X320	130_{m6}	250	137	32_{h9}	M24	i = 14 – 40*
	130_{m6}	210	137	32_{h9}	M24	i = 45 – 80**

LSS – X.KS.. (Solid shaft with key)

	Ø D	L	OS	T	U	DIN 332 DR. M..	kg
X220	210_{m6}	350	703	221	50_{h9}	M30	2890
X230	230_{m6}	410	763	241	50_{h9}	M36	3060
X240	230_{m6}	410	811	241	50_{h9}	M36	3910
X250	240_{m6}	410	811	252	56_{h9}	M36	4040
X260	250_{m6}	410	847	262	56_{h9}	M36	4870
X270	270_{m6}	470	920	282	63_{h9}	M36	5370
X280	290_{m6}	470	920	302	63_{h9}	M36	5870
X290	290_{m6}	470	962	302	63_{h9}	M36	7020
X300	300_{m6}	470	962	314	70_{h9}	M36	7720
X310	320_{m6}	470	999	334	70_{h9}	M42	8570
X320	340_{m6}	550	1079	355	80_{h9}	M42	9470

LSS – X.KA.. (Hollow shaft with keyway)

	Ø D2	Ø EA	OA	T2	U2	WA	ISO 4017 M..	kg
X220	210^{H8}	360	352.5	221.4	50^{JS9}	417	M30x90-8.8	2710
X230	210^{H8}	360	352.5	221.4	50^{JS9}	417	M30x90-8.8	2840
X240	230^{H8}	420	400.5	241.4	50^{JS9}	469	M36x110-8.8	3625
X250	240^{H8}	420	400.5	252.4	56^{JS9}	469	M36x110-8.8	3735
X260	240^{H8}	420	437	252.4	56^{JS9}	509	M36x110-8.8	4420
X270	275^{H8}	460	450	287.4	63^{JS9}	523	M36x110-8.8	4870
X280	275^{H8}	460	450	287.4	63^{JS9}	523	M36x110-8.8	5320
X290	290^{H8}	486	492	302.4	63^{JS9}	565	M36x110-8.8	6370
X300	290^{H8}	486	492	302.4	63^{JS9}	565	M36x110-8.8	6970
X310	320^{H8}	544	528.5	334.4	70^{JS9}	612	M42x130-8.8	7720
X320	320^{H8}	544	528.5	334.4	70^{JS9}	612	M42x130-8.8	8420

LSS – X.KH.. (Hollow shaft with shrink disk)

	Ø D5	Ø D6	ØEH	MD	OH	WH	ISO 4017 M..	kg
X220	210^{H7}	211^{H9}	484	497.5	352.5	562	M30x90-8.8	2815
X230	210^{H7}	211^{H9}	484	497.5	352.5	562	M30x90-8.8	2950
X240	230^{H7}	231^{H9}	558	571.5	400.5	654	M36x110-8.8	3790
X250	240^{H7}	241^{H9}	558	571.5	400.5	654	M36x110-8.8	3895
X260	250^{H7}	255^{H9}	558	608	437	694	M36x110-8.8	4570
X270	280^{H7}	285^{H9}	602	630	450	706	M36x110-8.8	5120
X280	280^{H7}	285^{H9}	602	630	450	706	M36x110-8.8	5570
X290	300^{H7}	305^{H9}	634	679	492	753	M36x110-8.8	6420
X300	300^{H7}	305^{H9}	634	679	492	753	M36x110-8.8	7220
X310	320^{H7}	325^{H9}	692	740.5	528.5	825	M42x130-8.8	8070
X320	320^{H7}	325^{H9}	692	740.5	528.5	825	M42x130-8.8	8770

X.K.. 4-stage bevel-helical gear unit
X4K100 – 210

X4KS../HU

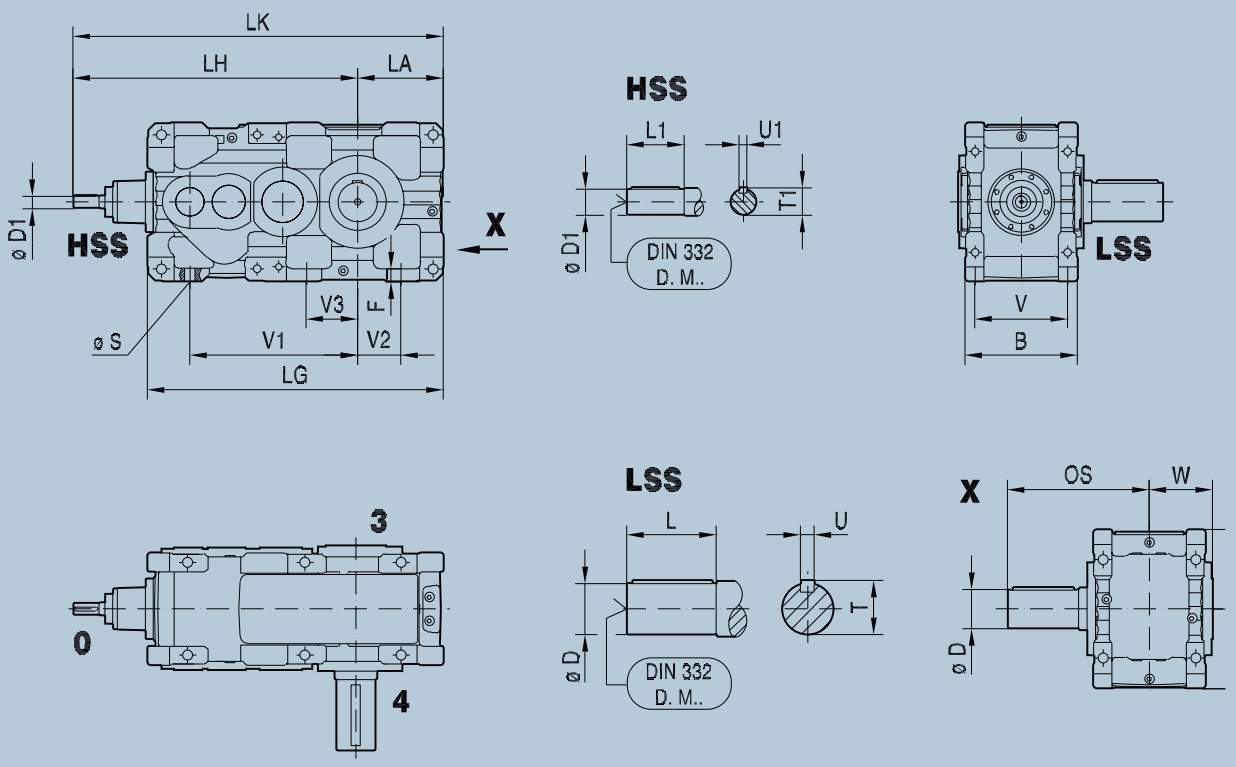

X4KA../HU

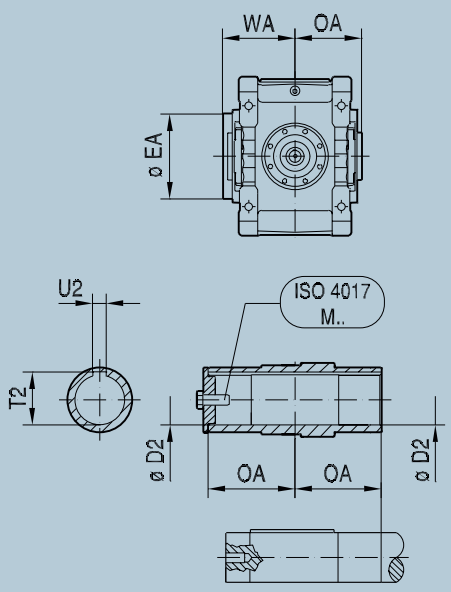

X4KH../HU

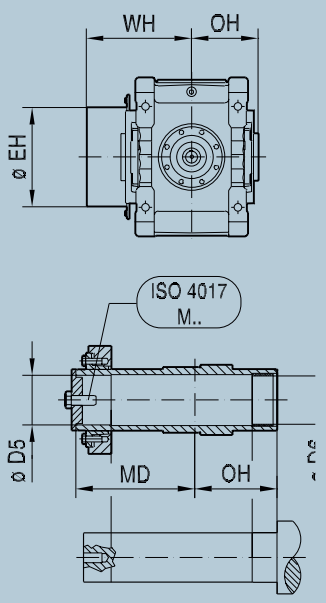

Size	B	F	H	LA	LG	LH	LK	P	Ø S	V	V1	V2	V3	W
X120	300	33	$225_{-0.5}$	$215_{-0.5}$	767	710	925	450	28 (4x)	245	440	105	–	174
X130	300	33	$225_{-0.5}$	$250_{-0.5}$	838	746	996	450	28 (4x)	245	475	140	–	174
X140	360	42	$265_{-0.5}$	$250_{-0.5}$	903	856	1106	530	35 (4x)	290	510	110	–	202
X150	360	42	$265_{-0.5}$	$295_{-0.5}$	990	898	1193	530	35 (4x)	290	555	155	–	202
X160	425	50	$315_{-0.5}$	$355_{-0.5}$	1144	1029	1384	630	42 (4x)	340	620	185	–	240
X170	425	50	$315_{-0.5}$	$355_{-0.5}$	1195	1080	1435	630	42 (4x)	340	670	185	–	240
X180	475	55	$335_{-0.5}$	$370_{-0.5}$	1249	1198	1568	670	42 (6x)	390	710	190	215	277
X190	475	55	$335_{-0.5}$	$370_{-0.5}$	1281	1230	1600	670	42 (6x)	390	740	190	215	277
X200	515	60	$375_{-0.5}$	$420_{-0.5}$	1409	1285	1705	750	48 (6x)	420	780	205	230	298
X210	515	60	$375_{-0.5}$	$420_{-0.5}$	1445	1321	1741	750	48 (6x)	420	815	205	230	298

HSS					
	Ø D1	**L1**	**T1**	**U1**	**DIN 332 DR. M..**
X120	28_{k6}	60	31	8_{h9}	M10
X130	28_{k6}	60	31	8_{h9}	M10
X140	32_{k6}	80	35	10_{h9}	M12
X150	32_{k6}	80	35	10_{h9}	M12
X160	38_{k6}	100	41	10_{h9}	M12
X170	38_{k6}	100	41	10_{h9}	M12
X180	50_{k6}	110	53.5	14_{h9}	M16
X190	50_{k6}	110	53.5	14_{h9}	M16
X200	50_{k6}	110	53.5	14_{h9}	M16
X210	50_{k6}	110	53.5	14_{h9}	M16

LSS – X.KS.. (Solid shaft with key)							
	Ø D	**L**	**OS**	**T**	**U**	**DIN 332 DR. M..**	**kg**
X120	100_{m6}	210	401	106	28_{h9}	M24	340
X130	110_{m6}	210	404	116	28_{h9}	M24	380
X140	120_{m6}	210	432	127	32_{h9}	M24	555
X150	130_{m6}	250	475	137	32_{h9}	M24	625
X160	140_{m6}	250	506	148	36_{h9}	M30	960
X170	160_{m6}	300	556	169	40_{h9}	M30	1120
X180	170_{m6}	300	592	179	40_{h9}	M30	1410
X190	170_{m6}	300	592	179	40_{h9}	M30	1420
X200	180_{m6}	300	612	190	45_{h9}	M30	1850
X210	190_{m6}	350	662	200	45_{h9}	M30	1900

LSS – X.KA.. (Hollow shaft with keyway)								
	Ø D2	**Ø EA**	**OA**	**T2**	**U2**	**WA**	**ISO 4017 M..**	**kg**
X120	95^{H8}	202	190.5	100.4	25^{JS9}	223	M24x70-8.8	320
X130	105^{H8}	222	194	111.4	28^{JS9}	225	M24x70-8.8	355
X140	115^{H8}	222	222	122.4	32^{JS9}	225	M24x70-8.8	520
X150	125^{H8}	250	224.5	132.4	32^{JS9}	255	M24x70-8.8	575
X160	135^{H8}	270	256	143.4	36^{JS9}	319	M30x90-8.8	890
X170	150^{H8}	270	256	158.4	36^{JS9}	319	M30x90-8.8	1040
X180	165^{H8}	278	292	174.4	40^{JS9}	356	M30x90-8.8	1310
X190	165^{H8}	278	292	174.4	40^{JS9}	356	M30x90-8.8	1320
X200	180^{H8}	332	319.5	190.4	45^{JS9}	383	M30x90-8.8	1765
X210	190^{H8}	332	319.5	200.4	45^{JS9}	383	M30x90-8.8	1785

LSS – X.KH.. (Hollow shaft with shrink disk)								
	Ø D5	**Ø D6**	**Ø EH**	**MD**	**OH**	**WH**	**ISO 4017 M..**	**kg**
X120	100^{H7}	101^{H9}	272	286.5	190.5	319	M24x70-8.8	330
X130	110^{H7}	111^{H9}	292	297	194	328	M24x70–8.8	370
X140	120^{H7}	121^{H9}	304	329	222	356	M24x70-8.8	545
X150	130^{H7}	131^{H9}	322	337.5	224.5	368	M24x70-8.8	605
X160	140^{H7}	141^{H9}	368	375	256	427	M30x90-8.8	920
X170	150^{H7}	151^{H9}	368	364	256	427	M30x90-8.8	1095
X180	165^{H7}	166^{H9}	382	400	292	463	M30x90-8.8	1360
X190	165^{H7}	166^{H9}	382	400	292	463	M30x90-8.8	1370
X200	180^{H7}	181^{H9}	446	450.5	319.5	517	M30x90-8.8	1835
X210	190^{H7}	191^{H9}	446	453.5	319.5	517	M30x90-8.8	1870

X.K.. 4-stage bevel-helical gear unit
X4K220 – 320

X4KS../HU

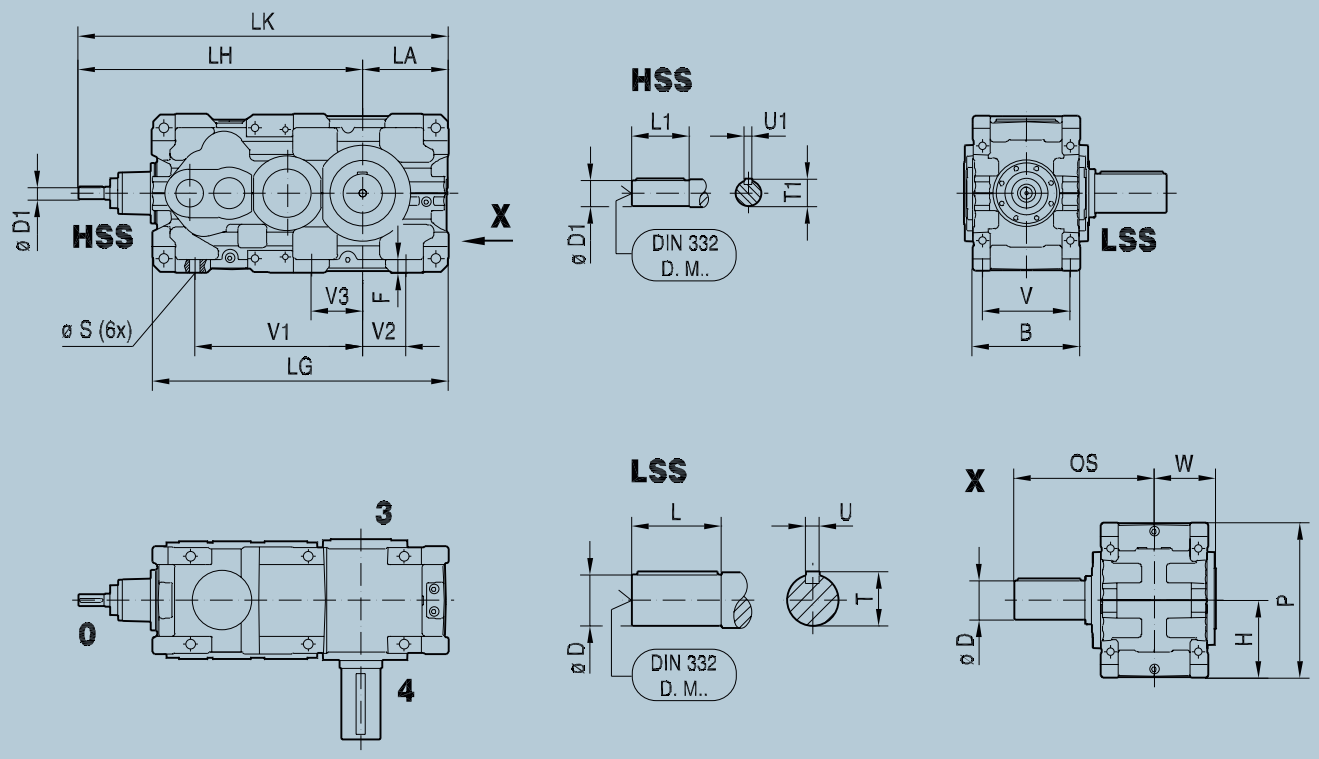

X4KA../HU

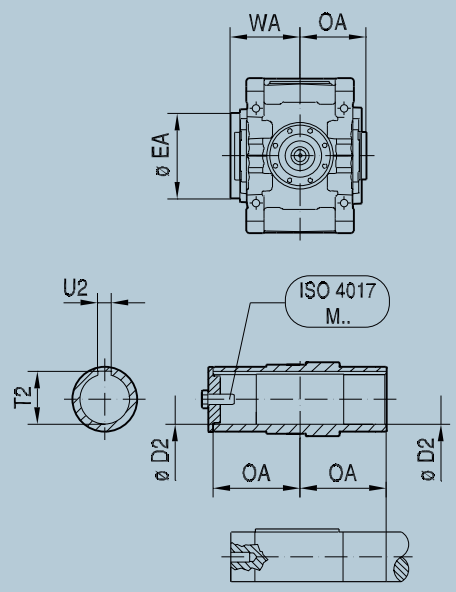

X4KH../HU

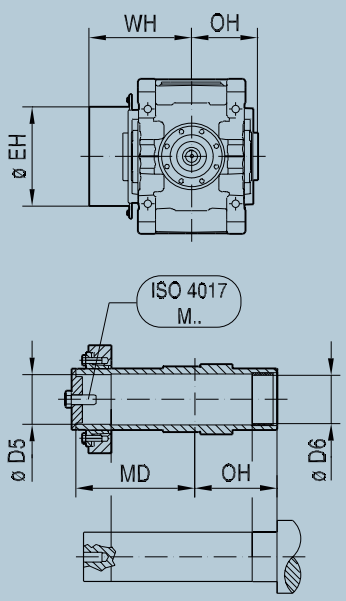

Size	B	F	H	LA	LG	LH	LK	P	Ø S	V	V1	V2	V3	W
X220	540	62	$425_{-0.5}$	$465_{-0.5}$	1584	1456	1921	850	48 (6x)	440	910	250	280	331
X230	540	62	$425_{-0.5}$	$465_{-0.5}$	1624	1496	1963	850	48 (6x)	440	950	250	280	331
X240	625	68	$450_{-0.5}$	$495_{-0.5}$	1721	1595	2090	900	56 (6x)	510	990	250	305	377
X250	625	68	$450_{-0.5}$	$495_{-0.5}$	1744	1618	2113	900	56 (6x)	510	1010	250	305	377
X260	705	63	$500_{-0.5}$	$545_{-0.5}$	1900	1785	2330	1017	56 (6x)	590	1110	300	350	417
X270	705	63	$500_{-0.5}$	$545_{-0.5}$	1935	1820	2365	1017	56 (6x)	590	1110	300	350	419
X280	705	73	$555_{-0.5}$	$610_{-0.5}$	2052	1872	2482	1127	56 (6x)	590	1190	360	380	419
X290	785	76	$580_{-0.5}$	$620_{-0.5}$	2187	2015	2635	1177	65 (6x)	655	1280	330	355	465
X300	785	76	$580_{-0.5}$	$620_{-0.5}$	2216	2044	2664	1177	65 (6x)	655	1280	330	355	465
X310	850	86	$630_{-0.5}$	$680_{-0.5}$	2410	2256	2936	1277	65 (6x)	720	1435	385	455	499
X320	850	86	$630_{-0.5}$	$680_{-0.5}$	2444	2290	2970	1277	65 (6x)	720	1435	385	455	499

HSS					
	Ø D1	**L1**	**T1**	**U1**	**DIN 332 DR. M..**
X220	60_{m6}	140	64	18_{h9}	M20
X230	60_{m6}	140	64	18_{h9}	M20
X240	70_{m6}	140	74.5	20_{h9}	M20
X250	70_{m6}	140	74.5	20_{h9}	M20
X260	80_{m6}	170	85	22_{h9}	M20
X270	80_{m6}	170	85	22_{h9}	M20
X280	80_{m6}	170	85	22_{h9}	M20
X290	85_{m6}	170	90	22_{h9}	M20
X300	85_{m6}	170	90	22_{h9}	M20
X310	100_{m6}	210	106	28_{h9}	M24
X320	100_{m6}	210	106	28_{h9}	M24

LSS – X.KS.. (Solid shaft with key)							
	Ø D	**L**	**OS**	**T**	**U**	**DIN 332 DR. M..**	**kg**
X220	210_{m6}	350	703	221	50_{h9}	M30	2700
X230	230_{m6}	410	763	241	50_{h9}	M36	2940
X240	230_{m6}	410	811	241	50_{h9}	M36	3780
X250	240_{m6}	410	811	252	56_{h9}	M36	4010
X260	250_{m6}	410	847	262	56_{h9}	M36	4620
X270	270_{m6}	470	920	282	63_{h9}	M36	5120
X280	290_{m6}	470	920	302	63_{h9}	M36	5670
X290	290_{m6}	470	962	302	63_{h9}	M36	7070
X300	300_{m6}	470	962	314	70_{h9}	M36	7820
X310	320_{m6}	470	999	334	70_{h9}	M42	8670
X320	340_{m6}	550	1079	355	80_{h9}	M42	9620

LSS – X.KA.. (Hollow shaft with keyway)								
	Ø D2	**Ø EA**	**OA**	**T2**	**U2**	**WA**	**ISO 4017 M..**	**kg**
X220	210^{H8}	360	352.5	221.4	50^{JS9}	417	M30x90-8.8	2520
X230	210^{H8}	360	352.5	221.4	50^{JS9}	417	M30x90-8.8	2720
X240	230^{H8}	420	400.5	241.4	50^{JS9}	469	M36x110-8.8	3495
X250	240^{H8}	420	400.5	252.4	56^{JS9}	469	M36x110-8.8	3705
X260	240^{H8}	420	437	252.4	56^{JS9}	509	M36x110-8.8	4170
X270	275^{H8}	460	450	287.4	63^{JS9}	523	M36x110-8.8	4620
X280	275^{H8}	460	450	287.4	63^{JS9}	523	M36x110-8.8	5120
X290	290^{H8}	486	492	302.4	63^{JS9}	565	M36x110-8.8	6370
X300	290^{H8}	486	492	302.4	63^{JS9}	565	M36x110-8.8	7070
X310	320^{H8}	544	528.5	334.4	70^{JS9}	612	M42x130-8.8	7820
X320	320^{H8}	544	528.5	334.4	70^{JS9}	612	M42x130-8.8	8470

LSS – X.KH.. (Hollow shaft with shrink disk)								
	Ø D5	**Ø D6**	**Ø EH**	**MD**	**OH**	**WH**	**ISO 4017 M..**	**kg**
X220	210^{H7}	211^{H9}	484	497.5	352.5	562	M30x90-8.8	2625
X230	210^{H7}	211^{H9}	484	497.5	352.5	562	M30x90-8.8	2830
X240	230^{H7}	231^{H9}	558	571.5	400.5	654	M36x110-8.8	3660
X250	240^{H7}	241^{H9}	558	571.5	400.5	654	M36x110-8.8	3865
X260	250^{H7}	255^{H9}	558	608	437	694	M36x110-8.8	4320
X270	280^{H7}	285^{H9}	602	630	450	706	M36x110-8.8	4870
X280	280^{H7}	285^{H9}	602	630	450	706	M36x110-8.8	5370
X290	300^{H7}	305^{H9}	634	679	492	753	M36x110-8.8	6620
X300	300^{H7}	305^{H9}	634	679	492	753	M36x110-8.8	7320
X310	320^{H7}	325^{H9}	692	740.5	528.5	825	M42x130-8.8	8170
X320	320^{H7}	325^{H9}	692	740.5	528.5	825	M42x130-8.8	8820

MD series

With a total of 17 sizes available, the MD series covers the torque range from 528 to 2584 kNm. Its numerous options and accessories and the possibility of implementing tailored solutions enable it to support the reliable operation of plants in the heavy load range.

With MD series industrial gear units, you can drive large machines in the upper torque range with operating reliability. We are prepared to implement customized solutions for your specific applications at any time.

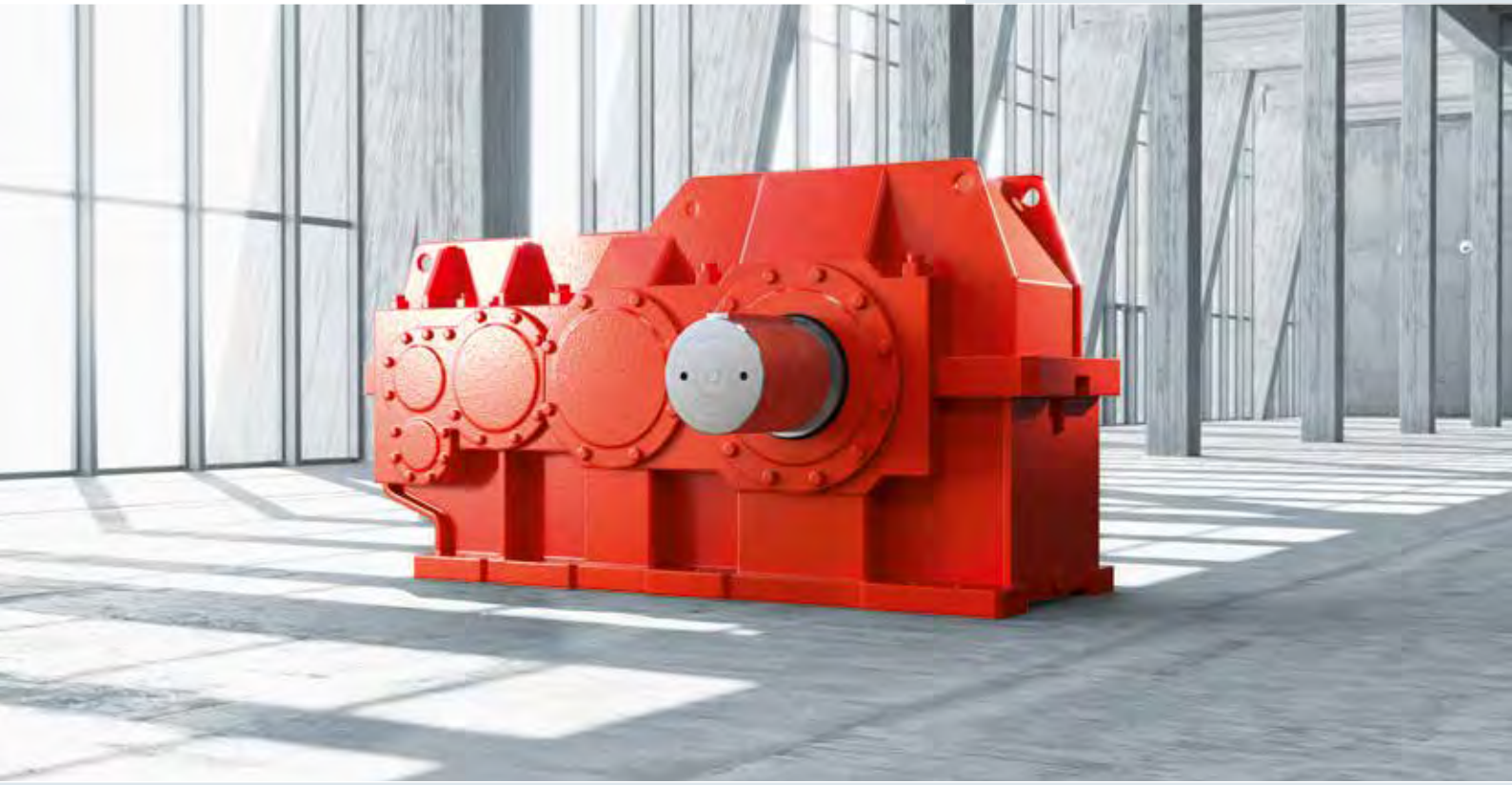

The comprehensive gear unit concept with finely stepped sizes and wide gear ratio range makes it possible to closely match the requirements of the application. The impressive features of the MD series include simple assembly and start-up and a high level of reliability. The horizontally split gear unit housing also adds to the maintainability.

The gear units can be used in many industry sectors and applications in the helical or bevel-helical gear design. Sealing systems and bearing and lubrication concepts etc. have been designed in such a way as to enable adaptation to the relevant prevailing ambient conditions and load conditions.

As a complete drive package with motor, couplings, brakes, steel construction, etc., the MD series fits seamlessly into SEW-EURODRIVE's system solutions.

Type designation MD series

MD 3 F S 360

Gear unit size
360 – 520

Type of output shaft:*
S = Solid shaft with key
R = Smooth solid shaft
L = Splined solid shaft

Gear unit design
F = Helical gear unit
K = Bevel-helical gear unit

Number of gear unit stages
2 = 2-stage
3 = 3-stage
4 = 4-stage
5 = 5-stage

Industrial gear unit series

* Hollow shaft on request

MD series –
Equipment variants and design features

Various sealing systems such as radial labyrinth seal (Taconite)

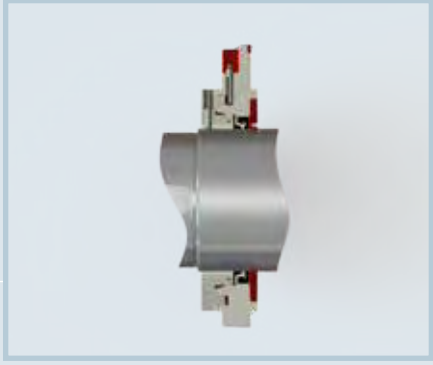

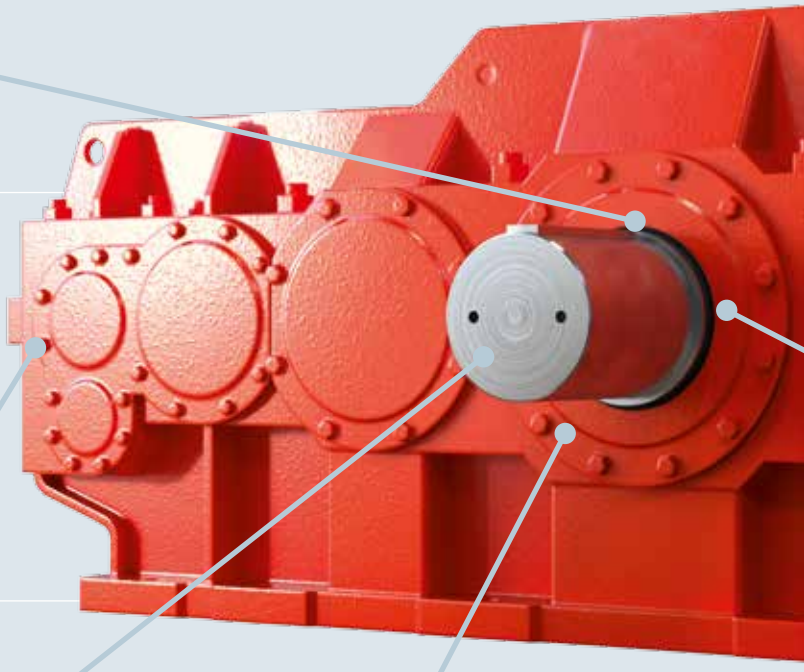

Sensors: PT100 temperature sensor, vibration sensor, etc.

Output shaft variants

Solid shaft with key or as smooth design

Splined solid shaft

Diverse range of coupling options

Welded steel housings

Bearing concepts for highest loads

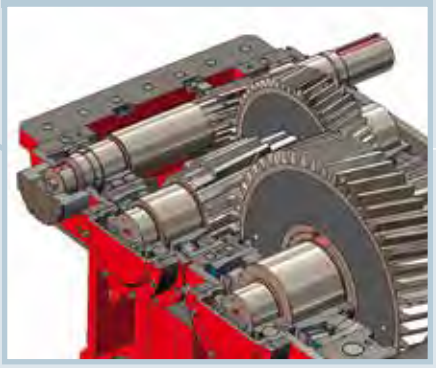

Splash and pressure lubrication

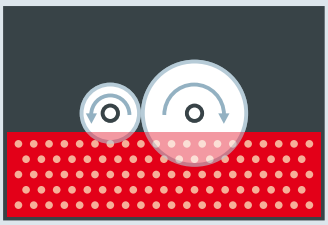

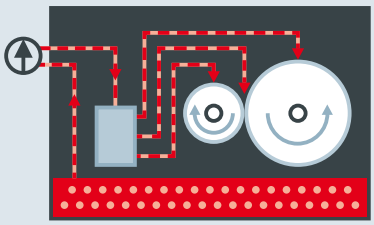

Other additional features and complete drive packages available.

Flexibly adaptable to meet customer requirements.

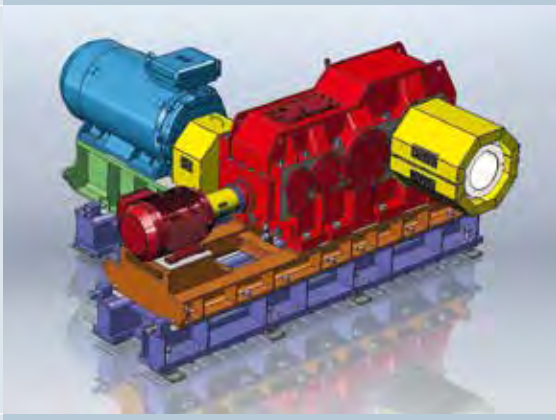

MD.F.. helical gear units: Nominal gear unit torque M_{N2} kNm

i_N	Size										
	360	370	380	390	400	410	420	430	440	450	460
5.6	528	–	600	725	–	862	–	1006	–	1238	–
6.3	528	–	600	725	–	862	–	1006	–	1238	–
7.1	528	–	600	725	–	862	–	1006	–	1238	–
8	528	–	600	725	–	862	–	1006	–	1238	–
9	528	–	600	725	–	862	–	1006	–	1238	–
10	528	–	600	725	–	862	–	1006	–	1238	–
11.2	528	–	600	725	–	862	–	1006	–	1238	–
12.5	528	–	600	725	–	862	–	1006	–	1238	–
14	528	–	600	725	–	862	–	1006	–	1238	–
16	528	–	600	725	–	862	–	1006	–	1238	–
18	528	–	600	725	–	862	–	1006	–	1238	–
20	561	617	675	745	822	902	998	1096	1209	1325	1452
22.4	561	617	675	745	822	902	998	1096	1209	1325	1452
25	561	617	675	745	822	902	998	1096	1209	1325	1452
28	561	617	675	745	822	902	998	1096	1209	1325	1452
31.5	561	617	675	745	822	902	998	1096	1209	1325	1452
35.5	561	617	675	745	822	902	998	1096	1209	1325	1452
40	561	617	675	745	822	902	998	1096	1209	1325	1452
45	561	617	675	745	822	902	998	1096	1209	1325	1452
50	561	617	675	745	822	902	998	1096	1209	1325	1452
56	561	617	675	745	822	902	998	1096	1209	1325	1452
63	561	617	675	745	822	902	998	1096	1209	1325	1452
71	561	617	675	745	822	902	998	1096	1209	1325	1452
80	561	617	675	745	822	902	998	1096	1209	1325	1452
90	561	617	675	754	822	902	998	1096	1209	1325	1452
100	561	617	675	754	822	902	998	1096	1209	1325	1452
112	561	617	675	754	822	902	998	1096	1209	1325	1452
125	561	617	675	754	822	902	998	1096	1209	1325	1452
140	561	617	675	754	822	902	998	1096	1209	1325	1452
160	561	617	675	754	822	902	998	1096	1209	1325	1452
182	561	617	675	754	822	902	998	1096	1209	1325	1452
200	561	617	675	754	822	902	998	1096	1209	1325	1452
224	561	617	675	754	822	902	998	1096	1209	1325	1452
250	561	617	675	754	822	902	998	1096	1209	1325	1452
280	561	617	675	754	822	902	998	1096	1209	1325	1452
315	561	617	675	754	822	902	998	1096	1209	1325	1452

* Actual gear ratio is determined on an order-specific basis

470	480	490	500	510	520	MD2F..
1381	–	–	–	–	–	
1381	–	–	–	–	–	
1381	–	–	–	–	–	
1381	–	–	–	–	–	
1381	–	–	–	–	–	
1381	–	–	–	–	–	
1381	–	–	–	–	–	
1381	–	–	–	–	–	
1381	–	–	–	–	–	
1381	–	–	–	–	–	
1381	–	–	–	–	–	
1603	1760	1938	2134	2348	2584	MD3F..
1603	1760	1938	2134	2348	2584	
1603	1760	1938	2134	2348	2584	
1603	1760	1938	2134	2348	2584	
1603	1760	1938	2134	2348	2584	
1603	1760	1938	2134	2348	2584	
1603	1760	1938	2134	2348	2584	
1603	1760	1938	2134	2348	2584	
1603	1760	1938	2134	2348	2584	
1603	1760	1938	2134	2348	2584	
1603	1760	1938	2134	2348	2584	
1603	1760	1938	2134	2348	2584	
1603	1760	1938	2134	2348	2584	MD4F..
1603	1760	1938	2134	2348	2584	
1603	1760	1938	2134	2348	2584	
1603	1760	1938	2134	2348	2584	
1603	1760	1938	2134	2348	2584	
1603	1760	1938	2134	2348	2584	
1603	1760	1938	2134	2348	2584	
1603	1760	1938	2134	2348	2584	
1603	1760	1938	2134	2348	2584	
1603	1760	1938	2134	2348	2584	
1603	1760	1938	2134	2348	2584	

Selection table

The selection table shows the nominal gear unit torque M_{N2} in kNm as a function of the size and the gear ratio range i.

Helical gear unit shaft positions

The following shaft positions are possible for series MD.F..:

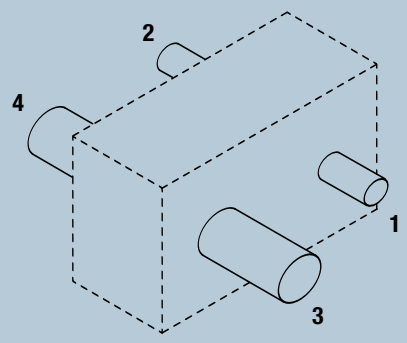

MD.F.. 2-stage helical gear unit
MD2F360 – 470

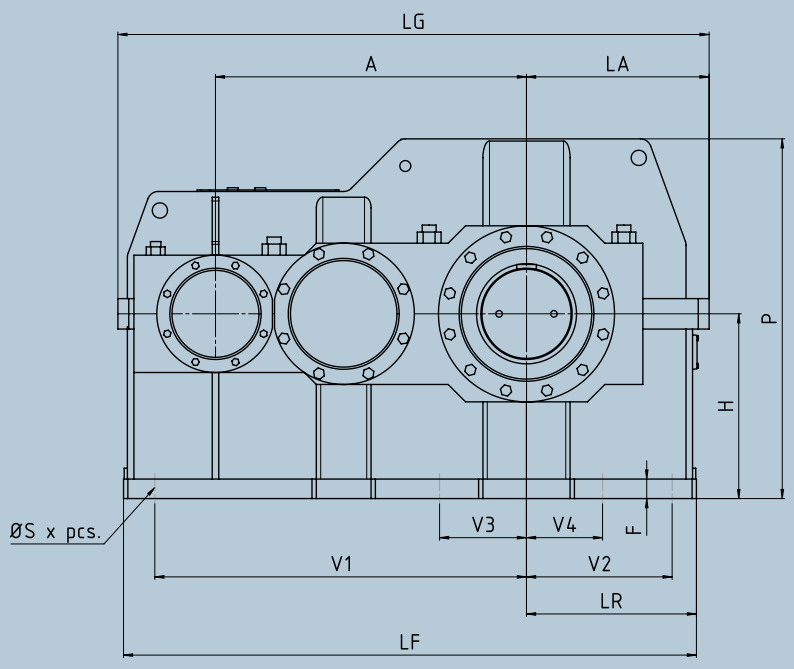

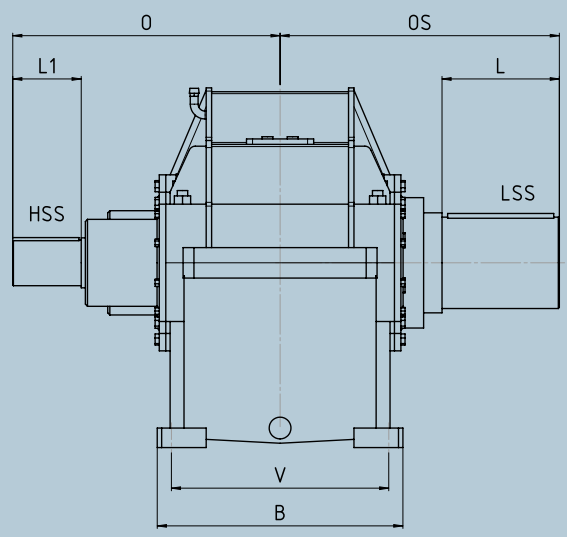

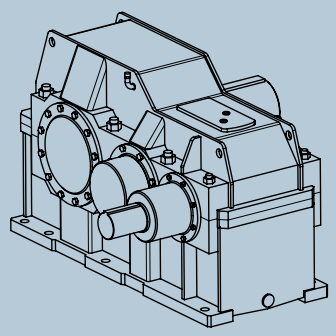

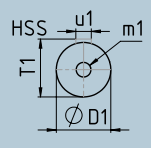

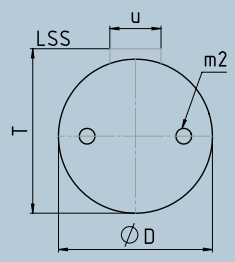

Size	A	B	F	H	LA	LG	LF	LR	P	Ø S	V	V1	V2	V3	V4
360	1150	995	80	770	740	2408	2220	676	1435	56 (8x)	815	1400	550	360	310
380	1202	1010	80	770	780	2485	2287	713	1480	56 (8x)	830	1430	575	360	310
390	1283	1070	80	770	810	2615	2412	738	1500	56 (8x)	890	1530	595	360	310
410	1348	1130	90	850	870	2720	2536	797	1630	66 (8x)	920	1595	635	400	350
430	1431	1210	90	850	920	2870	2693	839	1675	66 (8x)	1000	1710	670	400	350
450	1521	1270	90	940	1005	3020	2858	914	1820	66 (8x)	1060	1800	700	460	400
470	1607	1320	100	950	1070	3165	3033	973	1900	74 (8x)	1110	1900	730	460	400

HSS							
	i_N	L1	O	Ø D1	U1	T1	m1
360	5.6 – 12.5	270	1035	170	40	179	M30
	14 – 18	225	990	140	36	148	M30
380	5.6 – 11.2	315	1100	190	45	200	M20*
	12.5 – 18	225	1010	150	36	158	M30
390	5.6 – 12.5	315	1155	190	45	200	M20*
	14 – 18	270	1110	160	40	169	M30
410	5.6 – 10	315	1155	200	45	210	M20*
	11.2 – 18	270	1110	170	40	179	M30
430	5.6 – 12.5	315	1230	210	50	221	M20*
	14 – 18	270	1185	180	45	190	M30
450	5.6 – 11.2	370	1330	240	56	252	M24*
	12.5 – 18	315	1275	200	45	210	M20*
470	5.6 – 11.2	370	1355	260	56	272	M24*
	12.5 – 18	315	1300	200	45	210	M20*

* 2 x 180°, distance 0.6 x Ø D1

LSS						
L	OS	Ø D	U	T	m2*	kg
500	1185	340	80	355	M30	10200
500	1190	360	80	375	M30	11100
500	1120	380	80	395	M30	12500
595	1340	400	90	417	M30	14900
595	1410	420	90	437	M30	17300
595	1440	440	90	457	M30	19900
595	1465	460	100	479	M36	22400

* 2 x 180°, distance 0.6 x Ø D

MD.F.. 3-stage helical gear unit
MD3F360 – 520

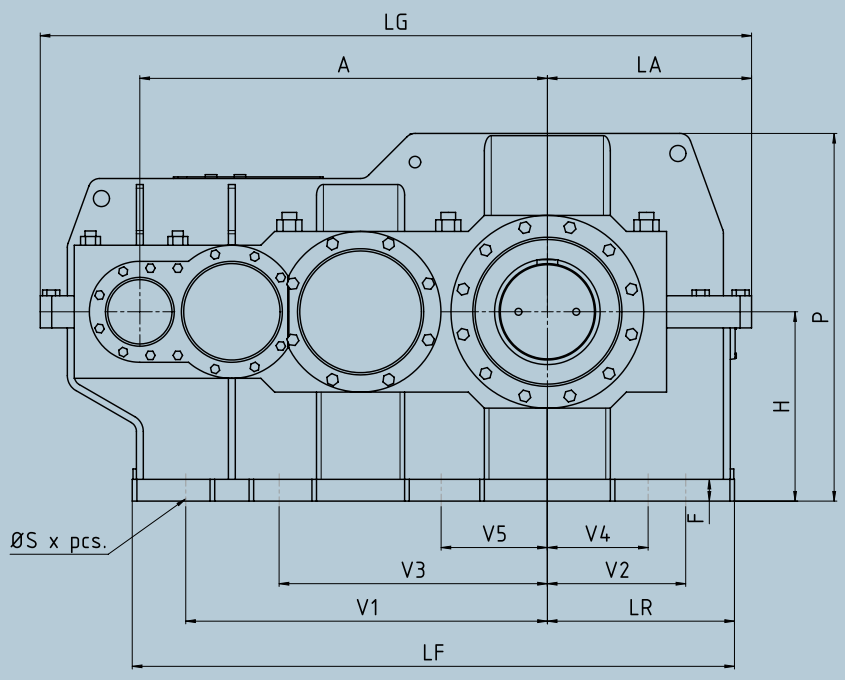

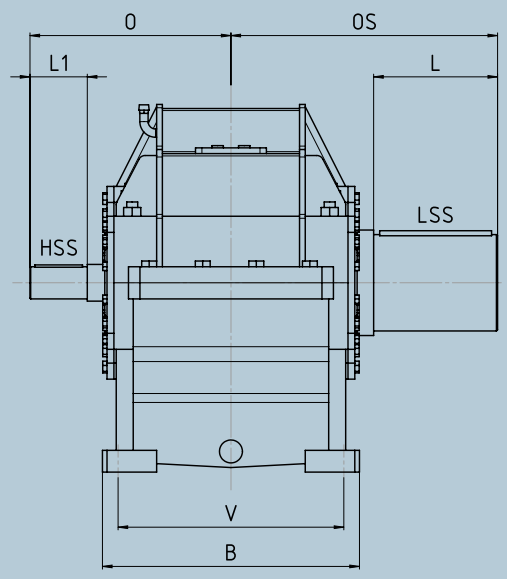

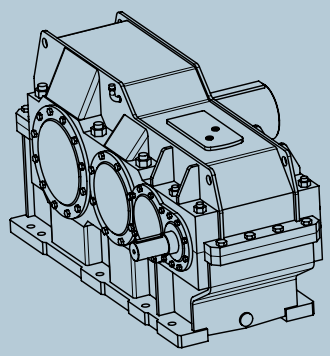

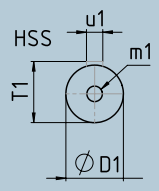

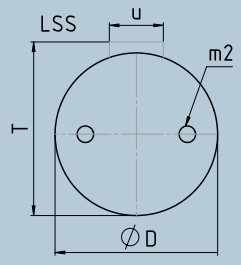

Size	A	B	F	H	H1	LA	LG	LF	LR	P	Ø S	V	V1	V2	V3	V4	V5
360	1459	930	80	680	452	740	2565	2159	676	1345	56 (10x)	794	1296	507	960	367	385
370	1506	946	80	705	471	760	2635	2226	694	1395	56 (10x)	810	1337	516	989	377	400
380	1556	980	95	725	484	780	2710	2296	713	1435	56 (10x)	844	1381	530	1025	386	408
390	1614	1036	95	750	501	810	2815	2378	738	1480	56 (10x)	900	1432	553	1061	406	428
400	1667	1046	95	775	517	850	2935	2467	773	1530	56 (10x)	910	1479	575	1103	416	429
410	1719	1070	95	800	532	870	3015	2549	797	1580	56 (10x)	934	1525	585	1133	422	443
420	1776	1120	95	825	548	890	3100	2624	815	1625	56 (10x)	984	1576	603	1169	439	463
430	1831	1168	112	850	565	920	3200	2703	839	1675	66 (10x)	1020	1625	627	1202	465	490
440	1897	1190	112	885	590	985	3370	2821	891	1745	66 (10x)	1042	1683	668	1241	493	515
450	1955	1234	122	910	606	1005	3460	2908	914	1790	70 (10x)	1086	1735	680	1281	501	525
460	2018	1286	122	940	626	1030	3555	2994	938	1850	70 (10x)	1138	1791	699	1330	516	535
470	2098	1312	135	980	654	1070	3695	3110	973	1930	70 (10x)	1158	1862	728	1386	539	556
480	2177	1350	135	1015	677	1130	3875	3238	1023	1995	70 (10x)	1196	1932	766	1439	566	576
490	2260	1402	135	1050	699	1160	3995	3350	1051	2065	70 (10x)	1248	2005	789	1502	582	588
500	2348	1444	155	1090	725	1200	4140	3487	1095	2140	74 (10x)	1284	2083	813	1550	595	614
510	2434	1514	155	1135	756	1235	4275	3602	1124	2230	74 (10x)	1354	2160	842	1606	625	647
520	2522	1540	155	1175	783	1270	4410	3723	1157	2305	74 (10x)	1380	2238	865	1667	636	660

HSS							
	i_N	L1	O	Ø D1	U1	T1	m1
360	20 – 40	210	700	120	32	127	M24
	45 – 80	210	700	110	28	116	M24
370	20 – 40	210	708	120	32	127	M24
	45 – 80	210	708	110	28	116	M24
380	20 – 40	250	766	130	32	137	M24
	45 – 80	210	726	120	32	127	M24
390	20 – 40	250	832	130	32	137	M24
	45 – 80	210	792	120	32	127	M24
400	20 – 40	250	838	130	32	137	M24
	45 – 80	210	798	120	32	127	M24
410	20 – 40	250	850	140	36	148	M30
	45 – 80	250	850	130	32	137	M24
420	20 – 40	250	876	140	36	148	M30
	45 – 80	250	876	130	32	137	M24
430	20 – 40	250	902	140	36	148	M30
	45 – 80	250	902	130	32	137	M24
440	20 – 40	250	933	150	36	158	M30
	45 – 80	250	933	140	36	148	M30
450	20 – 40	250	959	150	36	158	M30
	45 – 80	250	959	140	36	148	M30
460	20 – 40	300	1034	160	40	169	M30
	45 – 80	250	984	150	36	158	M30
470	20 – 40	300	1047	160	40	169	M30
	45 – 80	250	997	150	36	158	M30
480	20 – 40	300	1059	170	40	179	M30
	45 – 80	300	1059	160	40	169	M30
490	20 – 40	300	1086	170	40	179	M30
	45 – 80	300	1086	160	40	169	M30
500	20 – 40	300	1119	180	45	190	M20*
	45 – 80	300	1119	170	40	179	M30
510	20 – 40	300	1153	180	45	190	M20*
	45 – 80	300	1153	170	40	179	M30
520	20 – 40	350	1217	190	45	200	M20*
	45 – 80	300	1167	180	45	190	M20*

* 2 x 180°, distance 0.6 x Ø D1

LSS						
L	OS	Ø D	U	T	m2*	kg
450	961	360	80	375	M30	8100
450	973	360	80	395	M30	9140
450	991	380	80	395	M30	9870
540	1114	400	90	417	M30	11200
540	1120	400	90	417	M30	12030
540	1136	420	90	437	M30	13230
540	1162	420	90	437	M30	14610
540	1188	440	90	457	M30	15990
540	1199	440	90	457	M30	17800
540	1225	460	100	479	M36	19400
540	1274	460	100	479	M36	21030
540	1287	480	100	499	M36	23060
540	1299	480	100	499	M36	24960
540	1331	500	100	519	M36	27890
540	1364	500	100	519	M36	31810
680	1533	520	120	543	M36	34830
680	1547	520	120	543	M36	37840

* 2 x 180°, distance 0.6 x Ø D

MD.F.. 4-stage helical gear unit
MD4F360 – 520

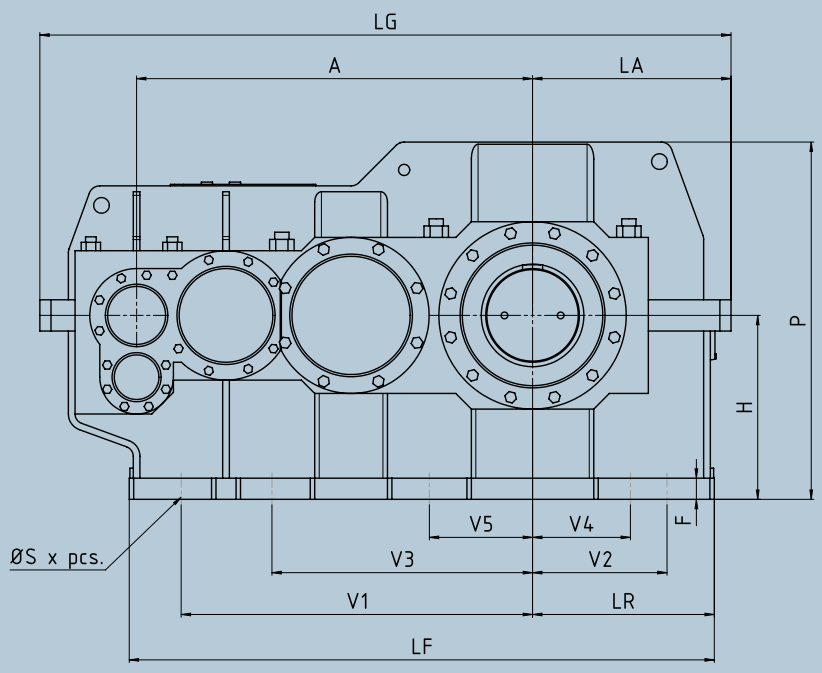

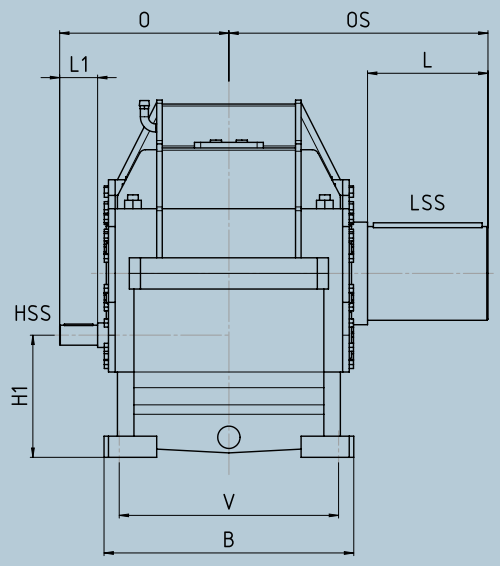

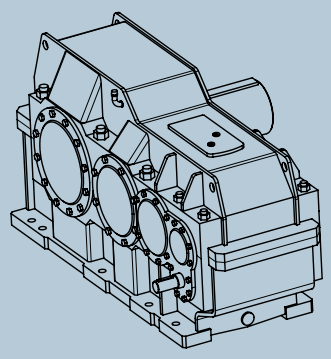

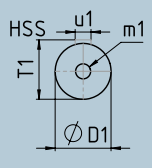

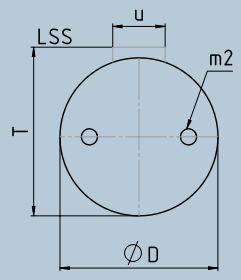

Size	A	B	F	H	H1	LA	LG	LF	LR	P	Ø S	V	V1	V2	V3	V4	V5
360	1459	930	80	680	452	740	2565	2159	676	1345	56 (10x)	794	1296	507	960	367	385
370	1506	946	80	705	471	760	2635	2226	694	1395	56 (10x)	810	1337	516	989	377	400
380	1556	980	95	725	484	780	2710	2296	713	1435	56 (10x)	844	1381	530	1025	386	408
390	1614	1036	95	750	501	810	2815	2378	738	1480	56 (10x)	900	1432	553	1061	406	428
400	1667	1046	95	775	517	850	2935	2467	773	1530	56 (10x)	910	1479	575	1103	416	429
410	1719	1070	95	800	532	870	3015	2549	797	1580	56 (10x)	934	1525	585	1133	422	443
420	1776	1120	95	825	548	890	3100	2624	815	1625	56 (10x)	984	1576	603	1169	439	463
430	1831	1168	112	850	565	920	3200	2703	839	1675	66 (10x)	1020	1625	627	1202	465	490
440	1897	1190	112	885	590	985	3370	2821	891	1745	66 (10x)	1042	1683	668	1241	493	515
450	1955	1234	122	910	606	1005	3460	2908	914	1790	70 (10x)	1086	1735	680	1281	501	525
460	2018	1286	122	940	626	1030	3555	2994	938	1850	70 (10x)	1138	1791	699	1330	516	535
470	2098	1312	135	980	654	1070	3695	3110	973	1930	70 (10x)	1158	1862	728	1386	539	556
480	2177	1350	135	1015	677	1130	3875	3238	1023	1995	70 (10x)	1196	1932	766	1439	566	576
490	2260	1402	135	1050	699	1160	3995	3350	1051	2065	70 (10x)	1248	2005	789	1502	582	588
500	2348	1444	155	1090	725	1200	4140	3487	1095	2140	74 (10x)	1284	2083	813	1550	595	614
510	2434	1514	155	1135	756	1235	4275	3602	1124	2230	74 (10x)	1354	2160	842	1606	625	647
520	2522	1540	155	1175	783	1270	4410	3723	1157	2305	74 (10x)	1380	2238	865	1667	636	660

HSS							
	i_N	L1	O	Ø D1	U1	T1	m1
360	90 – 180	170	660	80	22	85	M20
	200 – 315	140	630	70	20	74.5	M20
370	90 – 180	170	668	80	22	85	M20
	200 – 315	140	638	70	20	74.5	M20
380	90 – 180	170	686	90	25	95	M24
	200 – 315	170	686	80	22	85	M20
390	90 – 180	170	715	90	25	95	M24
	200 – 315	170	715	80	22	85	M20
400	90 – 180	170	721	90	25	95	M24
	200 – 315	170	721	80	22	85	M20
410	90 – 180	210	773	100	28	106	M24
	200 – 315	170	733	90	25	95	M24
420	90 – 180	210	799	100	28	106	M24
	200 – 315	170	759	90	25	95	M24
430	90 – 180	210	825	100	28	106	M24
	200 – 315	170	785	90	25	95	M24
440	90 – 180	210	836	100	28	106	M24
	200 – 315	170	796	90	25	95	M24
450	90 – 180	210	862	110	28	116	M24
	200 – 315	210	862	100	28	106	M24
460	90 – 180	210	887	110	28	116	M24
	200 – 315	210	887	100	28	106	M24
470	90 – 180	210	900	110	28	116	M24
	200 – 315	210	900	100	28	106	M24
480	90 – 180	210	921	120	32	127	M24
	200 – 315	210	921	110	28	116	M24
490	90 – 180	210	948	120	32	127	M24
	200 – 315	210	948	110	28	116	M24
500	90 – 180	210	971	120	32	127	M24
	200 – 315	210	971	110	28	116	M24
510	90 – 180	250	1046	130	32	137	M24
	200 – 315	210	1006	120	32	127	M24
520	90 – 180	250	1060	130	32	137	M24
	200 – 315	210	1020	120	32	127	M24

* 2 x 180°, distance 0.6 x Ø D1

LSS						
L	OS	Ø D	U	T	m2*	kg
450	961	360	80	375	M30	8190
450	973	380	80	395	M30	9220
450	991	380	80	395	M30	1000
540	1114	400	90	417	M30	11380
540	1120	400	90	417	M30	12150
540	1136	420	90	437	M30	13400
540	1162	420	90	437	M30	14780
540	1188	440	90	457	M30	16200
540	1199	440	90	457	M30	17970
540	1225	460	100	479	M36	19610
540	1274	460	100	479	M36	21250
540	1287	480	100	499	M36	23270
540	1299	480	100	499	M36	25210
540	1331	500	100	519	M36	28140
540	1364	500	100	519	M36	32070
680	1533	520	120	543	M36	35170
680	1547	520	120	543	M36	38190

* 2 x 180°, distance 0.6 x Ø D

MD.K.. bevel-helical gear unit: Nominal gear unit torque M_{N2} kNm

i_N	Size										
	360	370	380	390	400	410	420	430	440	450	460
14	561	617	675	745	822	902	998	–	–	–	–
16	561	617	675	745	822	902	998	–	–	–	–
18	561	617	675	745	822	902	998	–	–	–	–
20	561	617	675	745	822	902	998	–	–	–	–
22.4	561	617	675	745	822	902	998	–	–	–	–
25	561	617	675	745	822	902	998	–	–	–	–
28	561	617	675	745	822	902	998	–	–	–	–
31.5	561	617	675	745	822	902	998	–	–	–	–
35.5	561	617	675	745	822	902	998	–	–	–	–
40	561	617	675	745	822	902	998	–	–	–	–
45	561	617	675	745	822	902	998	–	–	–	–
50	561	617	675	745	822	902	998	–	–	–	–
56	561	617	675	745	822	902	998	–	–	–	–
63	561	617	675	745	822	902	998	–	–	–	–
71	561	617	675	745	822	902	998	–	–	–	–
80	561	617	675	745	822	902	998	1096	1209	1325	1452
90	561	617	675	745	822	902	998	1096	1209	1325	1452
100	561	617	675	745	822	902	998	1096	1209	1325	1452
112	561	617	675	745	822	902	998	1096	1209	1325	1452
125	561	617	675	745	822	902	998	1096	1209	1325	1452
140	561	617	675	745	822	902	998	1096	1209	1325	1452
160	561	617	675	745	822	902	998	1096	1209	1325	1452
180	561	617	675	745	822	902	998	1096	1209	1325	1452
200	561	617	675	745	822	902	998	1096	1209	1325	1452
224	561	617	675	745	822	902	998	1096	1209	1325	1452
250	561	617	675	745	822	902	998	1096	1209	1325	1452
280	561	617	675	745	822	902	998	1096	1209	1325	1452
315	561	617	675	745	822	902	998	1096	1209	1325	1452
355	561	617	675	745	822	902	998	1096	1209	1325	1452
400	561	617	675	745	822	902	998	1096	1209	1325	1452
450 – 1600	561	617	675	745	822	902	998	1096	1209	1325	1452

* Actual gear ratio is determined on an order-specific basis

470	480	490	500	510	520	MD3K..
–	–	–	–	–	–	
–	–	–	–	–	–	
–	–	–	–	–	–	
–	–	–	–	–	–	
–	–	–	–	–	–	
–	–	–	–	–	–	
–	–	–	–	–	–	
–	–	–	–	–	–	
–	–	–	–	–	–	
–	–	–	–	–	–	
–	–	–	–	–	–	
–	–	–	–	–	–	
–	–	–	–	–	–	
–	–	–	–	–	–	
–	–	–	–	–	–	
1603	1760	1938	2134	2348	2584	MD4K..
1603	1760	1938	2134	2348	2584	
1603	1760	1938	2134	2348	2584	
1603	1760	1938	2134	2348	2584	
1603	1760	1938	2134	2348	2584	
1603	1760	1938	2134	2348	2584	
1603	1760	1938	2134	2348	2584	
1603	1760	1938	2134	2348	2584	
1603	1760	1938	2134	2348	2584	
1603	1760	1938	2134	2348	2584	
1603	1760	1938	2134	2348	2584	
1603	1760	1938	2134	2348	2584	
1603	1760	1938	2134	2348	2584	MD5K..
1603	1760	1938	2134	2348	2584	
1603	1760	1938	2134	2348	2584	
1603	1760	1938	2134	2348	2584	

Selection table

The selection table shows the nominal gear unit torque M_{N2} in kNm as a function of the size and the gear ratio range i.

Bevel-helical gear unit shaft positions

The following shaft positions are possible for series MD.K..:

Shaft position solid shaft

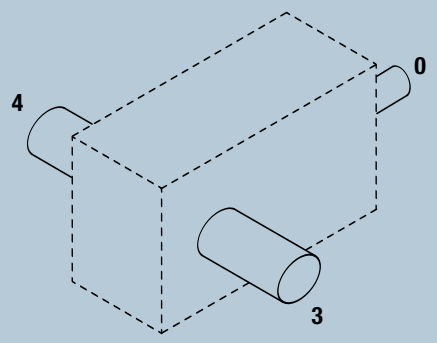

Shaft position hollow shaft

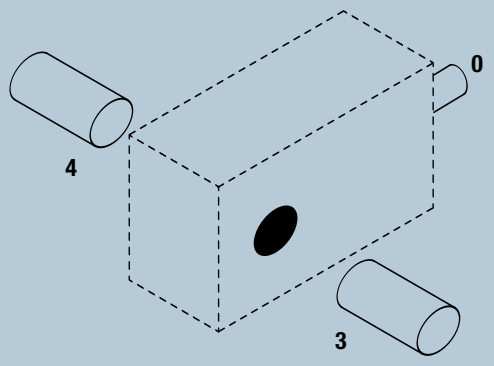

MD.K.. 3-stage bevel-helical gear unit
MD3K360 – 420

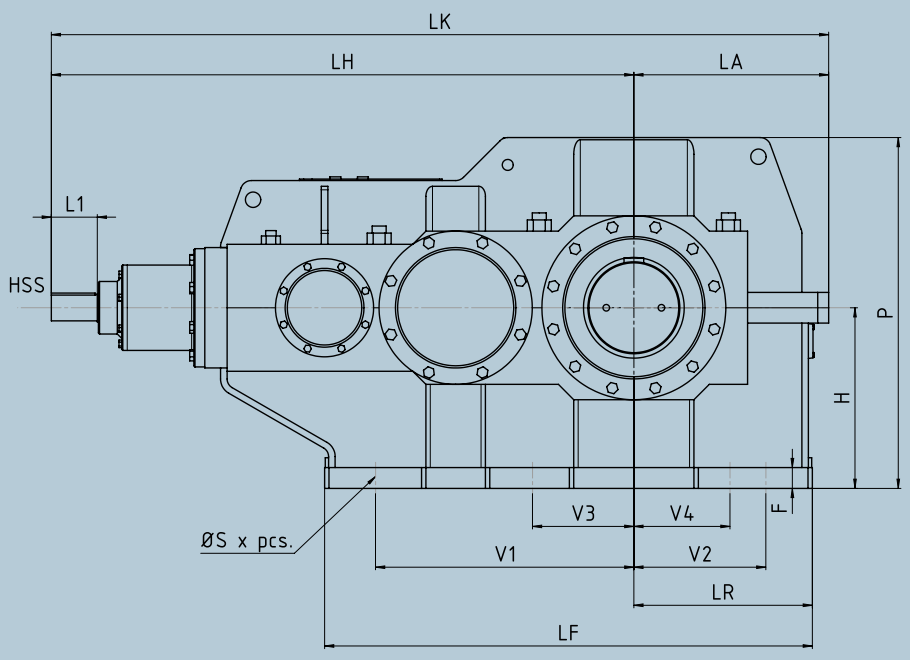

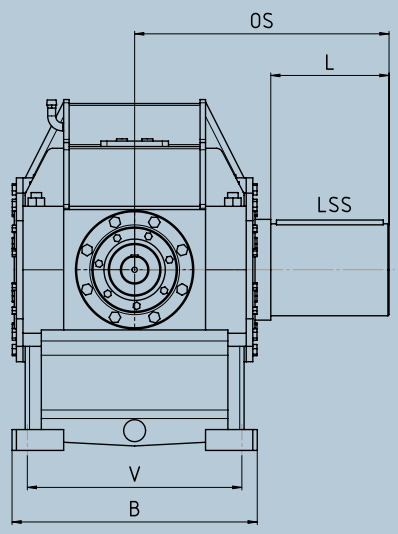

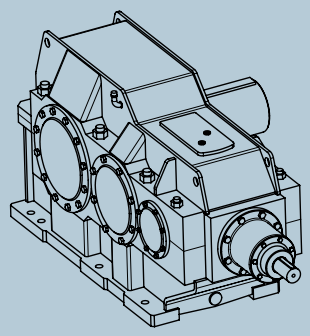

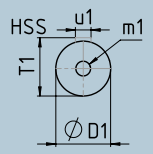

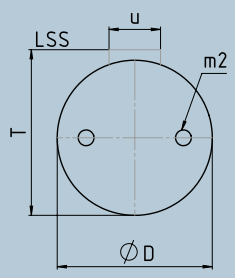

Size	B	F	H	LA	LF	LR	P	Ø S	V	V1	V2	V3	V4
360	930	80	680	740	1838	676	1345	56 (8x)	794	975	507	400	367
370	946	80	705	760	1896	694	1395	56 (8x)	810	1007	516	417	377
380	980	95	725	780	1954	713	1435	56 (8x)	844	1039	530	426	386
390	1036	95	750	810	2021	738	1480	56 (8x)	900	1075	553	445	406
400	1046	95	775	850	2098	773	1530	56 (8x)	910	1110	575	446	416
410	1070	95	800	870	2164	797	1580	56 (8x)	934	1140	585	461	422
420	1120	95	825	890	2228	815	1625	56 (8x)	984	1180	603	482	439

HSS								
	i_N	L1	Ø D1	U1	T1	m1	LH	LK
360	14 – 40	250	140_{m6}	36_{h9}	148	M30	2344	3084
	45 – 71	210	110_{m6}	28_{h9}	116	M24	2304	3044
370	14 – 40	250	140_{m6}	36_{h9}	148	M30	2393	3153
	45 – 71	210	110_{m6}	28_{h9}	116	M24	2353	3113
380	14 – 40	250	140_{m6}	36_{h9}	148	M30	2438	3218
	45 – 71	210	110_{m6}	28_{h9}	116	M24	2398	3178
390	14 – 40	250	140_{m6}	36_{h9}	148	M30	2493	3303
	45 – 71	210	110_{m6}	28_{h9}	116	M24	2453	3263
400	14 – 40	250	150_{m6}	36_{h9}	158	M30	2573	3423
	45 – 71	210	120_{m6}	32_{h9}	127	M24	2533	3383
410	14 – 40	250	150_{m6}	36_{h9}	158	M30	2635	3505
	45 – 71	210	120_{m6}	32_{h9}	127	M24	2595	3465
420	14 – 40	250	150_{m6}	36_{h9}	158	M30	2701	3591
	45 – 71	210	120_{m6}	32_{h9}	127	M24	2661	3551

* 2 x 180°, distance 0.6 x Ø D1

LSS						
L	OS	Ø D	U	T	m2*	kg
450	961	360	80	375	M30	8970
450	973	380	80	395	M30	10130
450	991	380	80	395	M30	10940
540	1114	400	90	417	M30	12410
540	1120	400	90	417	M30	13330
540	1136	420	90	437	M30	14660
540	1162	420	90	437	M30	16190

* 2 x 180°, distance 0.6 x Ø D

MD.K.. 4-stage bevel-helical gear unit
MD4K360 – 520

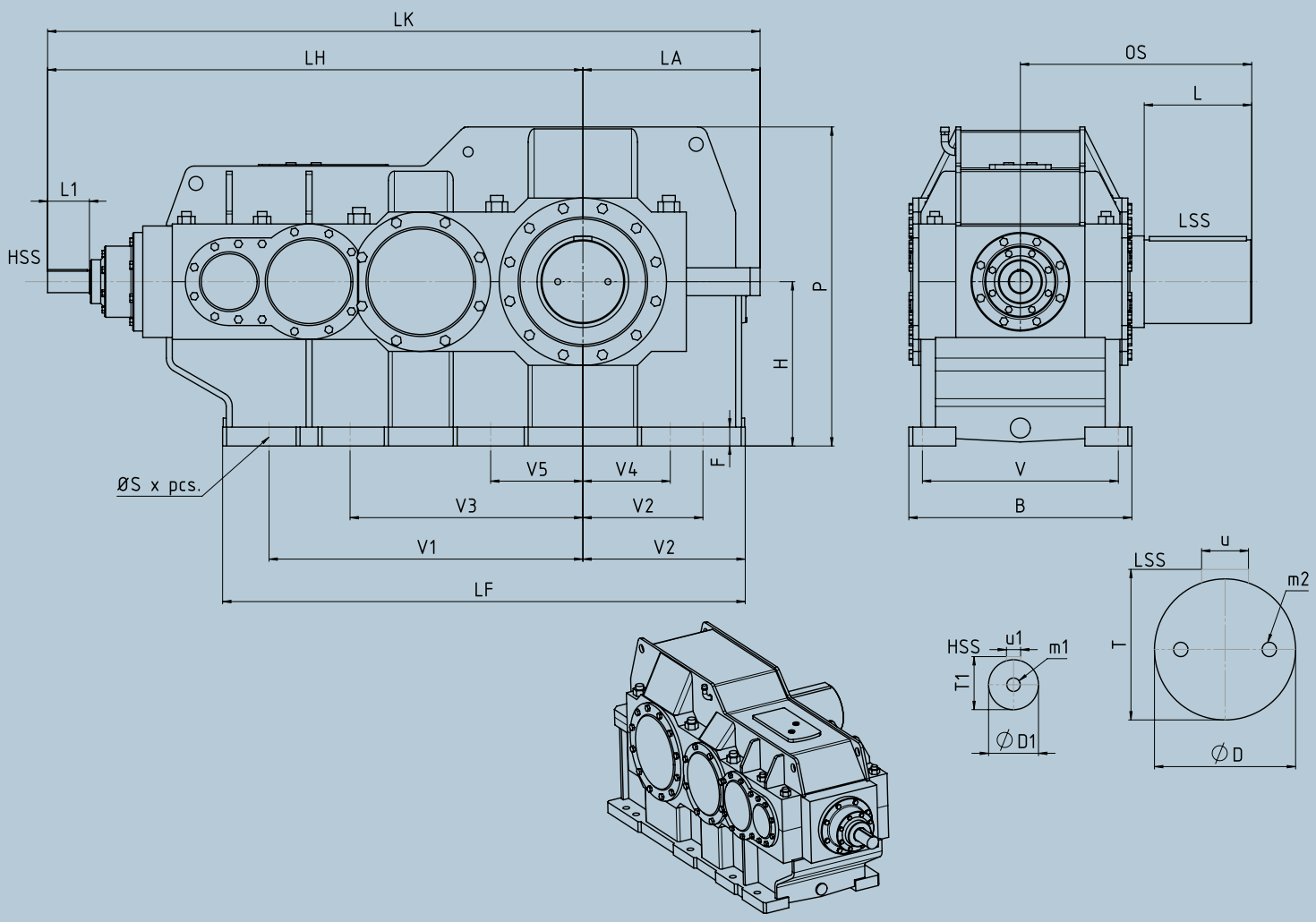

Size	B	F	H	H1	LA	LF	LR	P	Ø S	V	V1	V2	V3	V4	V5
360	930	80	680	452	740	2159	676	1345	56 (10x)	794	1296	507	960	367	385
370	946	80	705	471	760	2226	694	1395	56 (10x)	810	1337	516	989	377	400
380	980	95	725	484	780	2296	713	1435	56 (10x)	844	1381	530	1025	386	408
390	1036	95	750	501	810	2378	738	1480	56 (10x)	900	1432	553	1061	406	428
400	1046	95	775	517	850	2467	773	1530	56 (10x)	910	1479	575	1103	416	429
410	1070	95	800	532	870	2549	797	1580	56 (10x)	934	1525	585	1133	422	443
420	1120	95	825	548	890	2624	815	1625	56 (10x)	984	1576	603	1169	439	463
430	1168	112	850	565	920	2703	839	1675	66 (10x)	1020	1625	627	1202	465	490
440	1190	112	885	590	985	2821	891	1745	66 (10x)	1042	1683	668	1241	493	515
450	1234	122	910	606	1005	2908	914	1790	70 (10x)	1086	1735	680	1281	501	525
460	1286	122	940	626	1030	2994	938	1850	70 (10x)	1138	1791	699	1330	516	535
470	1312	135	980	654	1070	3110	973	1930	70 (10x)	1158	1862	728	1386	539	556
480	1350	135	1015	677	1130	3238	1023	1995	70 (10x)	1196	1932	766	1439	566	576
490	1402	135	1050	699	1160	3350	1051	2065	70 (10x)	1248	2005	789	1502	582	588
500	1444	155	1090	725	1200	3487	1095	2140	74 (10x)	1284	2083	813	1550	595	614
510	1514	155	1135	756	1235	3602	1124	2230	74 (10x)	1354	2160	842	1606	625	647
520	1540	155	1175	783	1270	3723	1157	2305	74 (10x)	1380	2238	865	1667	636	660

HSS								
	i_N	L1	Ø D1	U1	T1	m1	LH	LK
360	–	210	100	28	106	M24	2280	3020
370	–	210	100	28	106	M24	2327	3087
380	–	210	100	28	106	M24	2377	3157
390	–	210	100	28	106	M24	2435	3245
400	–	210	110	28	116	M24	2579	3429
410	–	210	110	28	116	M24	2631	3501
420	–	210	110	28	116	M24	2688	3578
430	–	210	110	28	116	M24	2743	3663
440	–	210	120	32	127	M24	2931	3916
450	–	210	120	32	127	M24	2989	3994
460	–	210	120	32	127	M24	3052	4082
470	–	210	120	32	127	M24	3132	4202
480	80 – 112	250	130	32	137	M24	3252	4382
	125 – 280	210	130	32	137	M24	3212	4342
490	80 – 112	250	130	32	137	M24	3335	4495
	125 – 280	210	130	32	137	M24	3295	4455
500	80 – 112	250	130	32	137	M24	3423	4623
	125 – 280	210	130	32	137	M24	3383	4583
510	80 – 160	250	140	36	148	M30	3631	4866
	180 – 280	250	130	32	137	M24	3616	4851
520	80 – 160	250	140	36	148	M30	3719	4989
	180 – 280	250	130	32	137	M24	3704	4974

* 2 x 180°, distance 0.6 x Ø D1

LSS						
L	OS	Ø D	U	T	m2*	kg
450	961	360	80	375	M30	8190
450	973	380	80	395	M30	9220
450	991	380	80	395	M30	10000
540	1114	400	90	417	M30	11380
540	1120	400	90	417	M30	12150
540	1136	420	90	437	M30	13400
540	1162	420	90	437	M30	14780
540	1188	440	90	457	M30	16200
540	1199	440	90	457	M30	17970
540	1225	460	100	479	M36	19610
540	1274	460	100	479	M36	21250
540	1287	480	100	499	M36	23270
540	1299	480	100	499	M36	25210
540	1331	500	100	519	M36	28140
540	1364	500	100	519	M36	32070
680	1533	520	120	543	M36	35170
680	1547	520	120	543	M36	38190

* 2 x 180°, distance 0.6 x Ø D

MD.K.. 5-stage bevel-helical gear unit
MD5K360 – 420

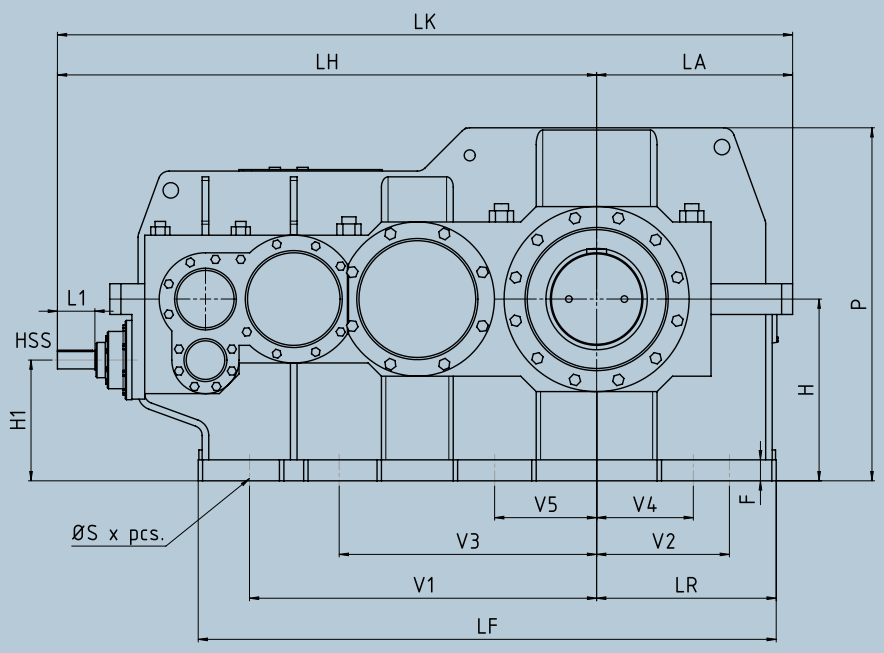

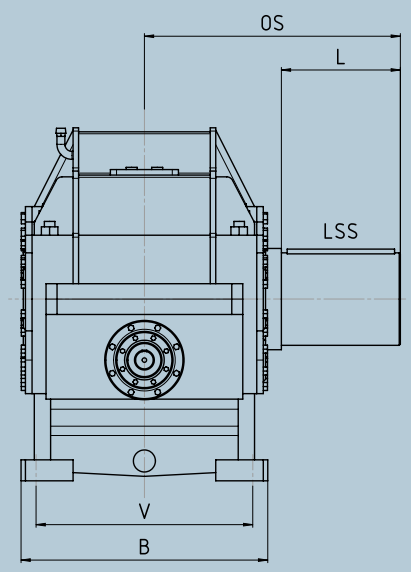

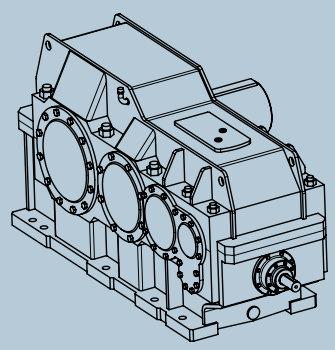

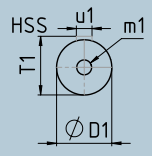

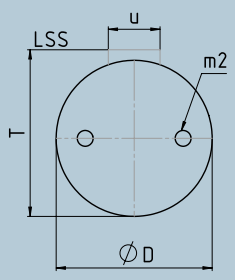

Size	B	F	H	H1	LA	LF	LR	P	Ø S	V	V1	V2	V3	V4	V5
360	930	80	680	452	740	2159	676	1345	56 (10x)	794	1296	507	960	367	385
370	946	80	705	471	760	2226	694	1395	56 (10x)	810	1337	516	989	377	400
380	980	95	725	484	780	2296	713	1435	56 (10x)	844	1381	530	1025	386	408
390	1036	95	750	501	810	2378	738	1480	56 (10x)	900	1432	553	1061	406	428
400	1046	95	775	517	850	2467	773	1530	56 (10x)	910	1479	575	1103	416	429
410	1070	95	800	532	870	2549	797	1580	56 (10x)	934	1525	585	1133	422	443
420	1120	95	825	548	890	2624	815	1625	56 (10x)	984	1576	603	1169	439	463
430	1168	112	850	565	920	2703	839	1675	66 (10x)	1020	1625	627	1202	465	490
440	1190	112	885	590	985	2821	891	1745	66 (10x)	1042	1683	668	1241	493	515
450	1234	122	910	606	1005	2908	914	1790	70 (10x)	1086	1735	680	1281	501	525
460	1286	122	940	626	1030	2994	938	1850	70 (10x)	1138	1791	699	1330	516	535
470	1312	135	980	654	1070	3110	973	1930	70 (10x)	1158	1862	728	1386	539	556
480	1350	135	1015	677	1130	3238	1023	1995	70 (10x)	1196	1932	766	1439	566	576
490	1402	135	1050	699	1160	3350	1051	2065	70 (10x)	1248	2005	789	1502	582	588
500	1444	155	1090	725	1200	3487	1095	2140	74 (10x)	1284	2083	813	1550	595	614
510	1514	155	1135	756	1235	3602	1124	2230	74 (10x)	1354	2160	842	1606	625	647
520	1540	155	1175	783	1270	3723	1157	2305	74 (10x)	1380	2238	865	1667	636	660

HSS								
	i_N	L1	Ø D1	U1	T1	m1	LH	LK
360	–	140	60	18	64	M20	2021	2761
370	–	140	60	18	64	M20	2068	2828
380	–	140	70	20	74.5	M20	2147	2927
390	–	140	70	20	74.5	M20	2205	3015
400	–	140	70	20	74.5	M20	2258	3108
410	–	170	80	22	85	M20	2391	3261
420	–	170	80	22	85	M20	2448	3338
430	–	170	80	22	85	M20	2503	3423
440	–	170	80	22	85	M20	2569	3554
450	–	170	85	22	90	M20	2691	3696
460	–	170	85	22	90	M20	2754	3784
470	–	170	85	22	90	M20	2834	3904
480	80 – 112	170	85	22	90	M20	2913	4043
	125 – 280							
490	80 – 112	170	85	22	90	M20	2996	4156
	125 – 280							
500	80 – 112	210	100	28	106	M24	3169	4369
	125 – 280							
510	80 – 160	210	100	28	106	M24	3255	4490
	180 – 280							
520	80 – 160	210	100	28	106	M24	3343	4613
	180 – 280							

* 2 x 180°, distance 0.6 x Ø D1

LSS						
L	OS	Ø D	U	T	m2*	kg
450	961	360	80	375	M30	8280
450	973	380	80	395	M30	9320
450	991	380	80	395	M30	10110
540	1114	400	90	417	M30	11500
540	1120	400	90	417	M30	12280
540	1136	420	90	437	M30	13550
540	1162	420	90	437	M30	14940
540	1188	440	90	457	M30	16380
540	1199	440	90	457	M30	18170
540	1225	460	100	479	M36	19830
540	1274	460	100	479	M36	21480
540	1287	480	100	499	M36	23530
540	1299	480	100	499	M36	25490
540	1331	500	100	519	M36	28450
540	1364	500	100	519	M36	32420
680	1533	520	120	543	M36	35560
680	1547	520	120	543	M36	38610

* 2 x 180°, distance 0.6 x Ø D

Further series and application extensions

Alongside the helical and bevel-helical gear units of the M1..N, X and MD series, the SEW-EURODRIVE industrial gear unit program is rounded off by more series and application extensions.

You can find more information about the industrial gear unit series on our website at **www.sew-eurodrive.de**.

X series – conveyor drives	Gear unit design	Stages	Gear ratio i	Nominal torque M_{N2} kNm
	Bevel-helical gear unit X3K../HT/B	3 stages	12.5 – 90	58 – 475

X series – bucket elevator drives	Gear unit design	Stages	Gear ratio i	Nominal torque M_{N2} kNm
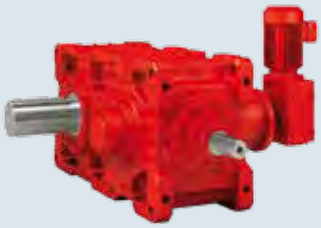	**Bevel-helical gear unit X3K.B..**	3 stages	28 – 80	6.8 – 270

X series – agitator drives	Gear unit design	Stages	Gear ratio i	Nominal torque M_{N2} kNm
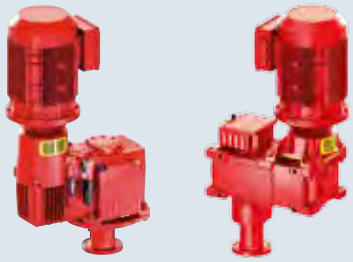	**Helical gear unit with vertical housing**	3 stages	20 – 100	22 – 90
	Helical and bevel-helical gear unit with universal housing	2 to 4 stages	6.3 – 450	22 – 90

X series – hoist drives	Gear unit design	Stages	Gear ratio i	Nominal torque M_{N2} kNm
	X../HC helical gear unit	3 to 4 stages	14 – 250	12.8 – 112

P series	Gear unit design	Stages	Gear ratio i	Nominal torque M_{N2} kNm
	P.RF.. helical planetary gear unit (gearmotors)	4 and 5 stages	100 – 4000	24 – 630
	P.KF.. bevel-helical planetary gear unit (gearmotors)	5 stages	140 – 4000	24 – 630

P-X series	Gear unit design	Stages	Gear ratio i	Nominal torque M_{N2} kNm
	P..RF.. helical planetary gear unit	4 and 5 stages	180 – 550	100 – 500
	P.X.K.. bevel-helical planetary gear unit	3 and 4 stages	28 – 550	25 – 500

XP series	Gear unit design	Stages	Gear ratio i	Nominal torque M_{N2} kNm
	XP.P planetary gear unit	2 to 4 stages	20 – 3000 *	600 – 5200
	XP.K bevel-planetary gear unit	4 stages	180 – 1200	600 – 5200
	XP.F helical-planetary gear unit	3 stages	45 – 80	600 – 5200

Segmented girth gears	Features
	– Girth gear pitch diameter up to about 16 m – Maximum width 600 mm – Maximum power 4 000 kW per pinion – Maximum pitch line velocity 6 m/s – Girth gear module 20, 25, 30, and 40 mm – Calculated according to ISO standard 6336 (AGMA on request)

Services along the entire system life cycle

At SEW-EURODRIVE, we use the term Life Cycle Services to describe services, resources and tools along the entire system life cycle. This begins in the initial orientation phase and continues all the way through to the operation and modernization of your machinery and systems. No matter what point of the life cycle you currently find yourself in, we want to support you with our scalable and tailored solutions from a single source. As a good partner, we are there for you – even when everything is going well.

Highlights of what we offer include:

Startup
- Installation and laser adjustment of drives
- Coordinated startup support
- First oil fill

Inspection and maintenance
- Preparation of an inspection and maintenance plan
- On-site inspections
- Condition monitoring advice and installation
- Gear unit diagnostics via examination with an inspection scope
- Oil management: Oil change after run-in period, complete oil service (change, refill, disposal)
- Oil quality analysis
- Production guidance/ monitoring

Repair
- Maintenance by replacing defective and affected parts
- Complete overhaul
- Reworking housings and shafts
- Production of gearing components and shafts according to sample/drawing

Retrofit
- Replacement of existing components (gear units, motors, couplings, etc.)
- Making adjustments
- Consideration of energy efficient aspects
- Exact reproduction of your components

SEW-EURODRIVE (Pty) Ltd is right here for you:

Durban
48 Prospecton Road
Isipingo
Durban
Phone: +27 31 902 3815
Fax: +27 31 902 3826

Nelspruit
7 Christie Crescent
Vintonia
Nelspruit
Phone: +27 13 752 8007
Fax: +27 13 752 8008

Port Elizabeth
Unit 4 Aldo Park
Old Cape Road
Greenbushes
Port Elizabeth
Phone: +27 41 372 2244/6
Fax: +27 41 372 2247

Cape Town
Rainbow Park
Cnr. Racecourse &
Omuramba Roads
Montague Gardens
Cape Town
Phone: +27 21 528 7600
Fax: +27 83 552 9830

SEW EURODRIVE

SEW-EURODRIVE (Pty) Ltd
Eurodrive House
Cnr. Adcock Ingram & Aerodrome
Roads, Aeroton Ext 2
Johannesburg
P.O. Box 90004
Bertsham 2013
Tel: +27 11 248 7000
Fax: +27 11 248 7289
➡ **www.sew-eurodrive.co.za**